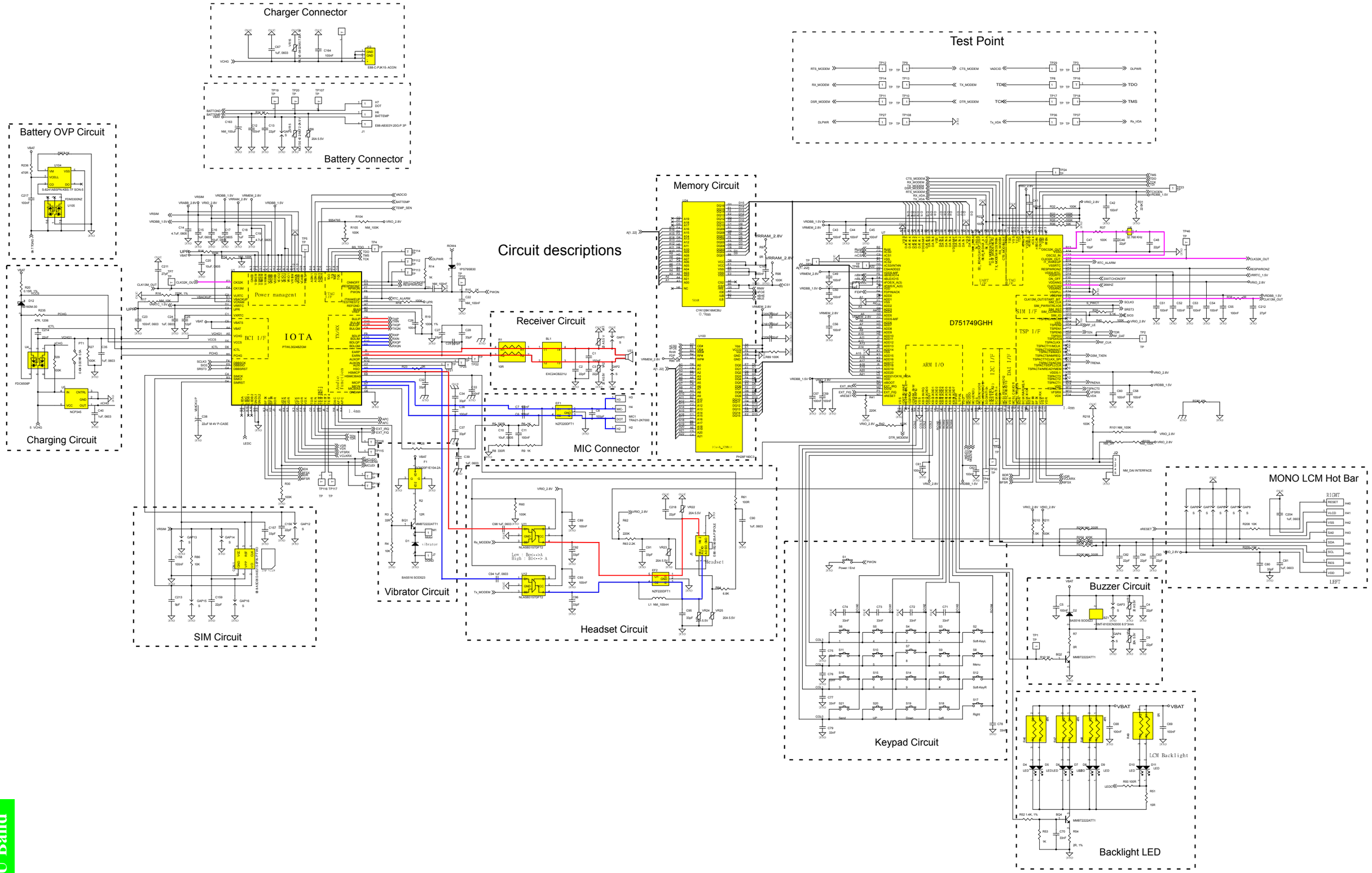

Fottune EU Band

Service Engineering & Optimization
Level 3 Authorized

	2005.7.27
Level 3 Schematics	Rev:1.0
Fortune EU band	
AlexanderBuehler,MichaelHansen	Page1of2

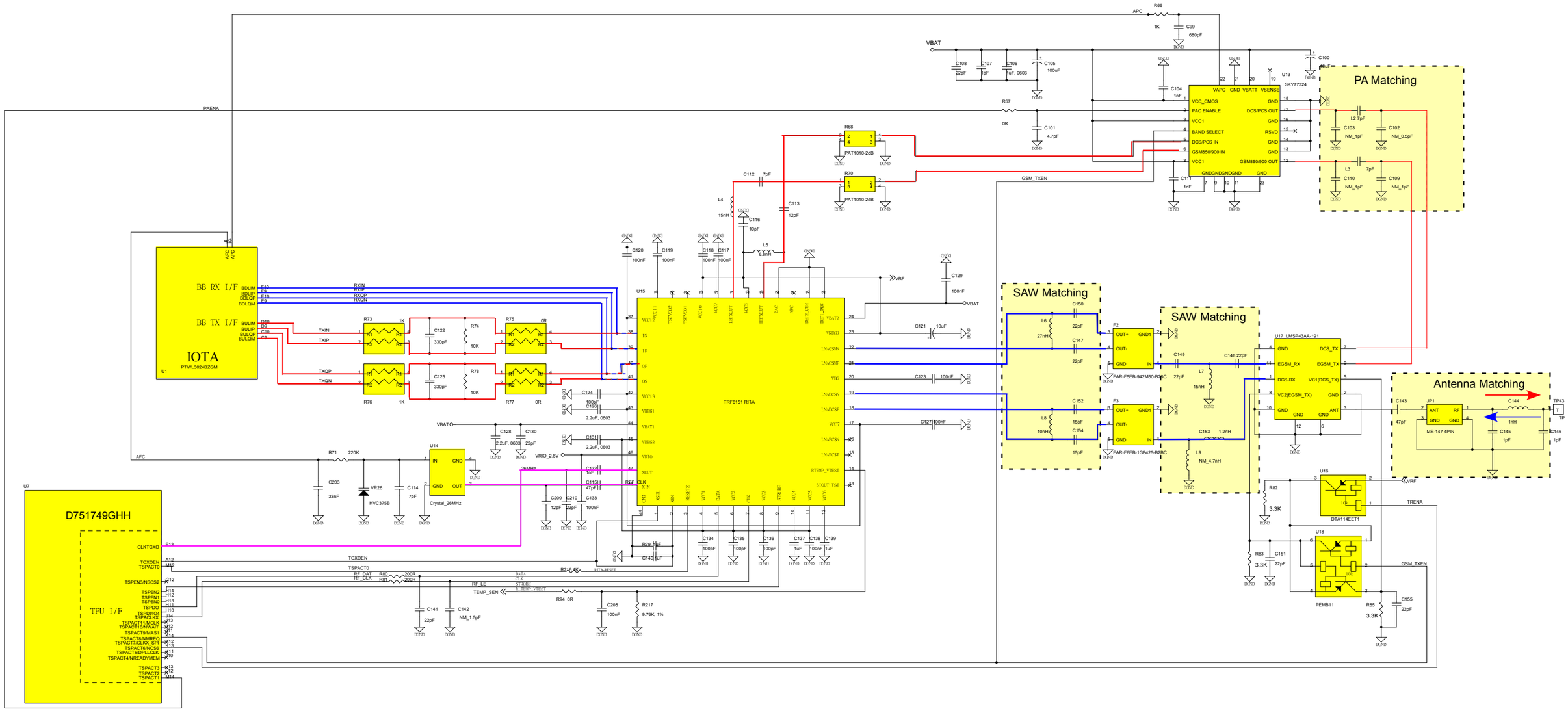

Fortune EU band

Service Engineering & Optimization
Level 3 Authorized

	2005.7.27
Level 3 Schematics	Rev.1.0
Fortune EU Band	
Alexanderlluchler,Michaellutzen	Page 2 of 2