# BB SCHEMETIC


1. Contents
2. MSM7230-0 Power Circuit
3. PM8058 Power GPIO/MPP
4. PM8058 Power Output
5. PM8058 Power Input
6. MAIN MIC
7. MSM7230-0 Connectivity
8. MSM7230-0 Connectivity
9. MSM7230-0 Connectivity
10. Power Manager for 1A Charger
11. Connector For SUB Board
12. LCD Interface
13. Earphone
14. G-Senosrs/Compass
15. Battery Connector/ Micro USB
16. SIM/TF CARD
17. 4GB eMMC AND LPDDR2
18. Test Points/GND/Shields
19. 8 Mega and 2 Mega Camera
20. Audio Circuits
21. Gyroscope
23. NFC
24. Antenna Switchplexer
25. WCDMA Band1 Power Amplifier


# RF SCHEMETIC


26. WCDMA Band 5/8 Power Amplifier
27. WCDMA Band 11/4/2 Power Amplifier
28. GSM Linear_PA
29. RX MATCHING CIRCUIT
30. QTR8615_CELL_SIGNALS
31. QTR8615 POWER DISTRIBUTION
32. QTR8615 PWR/GND DISTRIBUTION
33. GPS
34. WLAN & BT & FM Interface
35. WLAN & BT & FM POWER and GND
36. DIVERSITY PATH FRONT END
37.Power supply structure
38.PA DCDC
39.2.85 DCDC
40.LCD Backlight driver


华为机密，未经授权禁止扩散

The type and specification of the components refer to the BOM

| | | | | | |
|---|---|---|---|---|---|
| | | | | NA | 2011-7-20 |
| | | | | ECA NO | DATE |
| DESIGNED | SONGGANG/64526 | HD2U886M | | 00704566 | |
| REVIEWED | SONGGANG/64526 | | | | |
| | | VER | PART_NUMBER | SHEET 1 OF 40 | |
| | | NA | 03021HES | HUAWEI TECH CO.,LTD. | |

# 2. MSM7230-0 Power Circuit

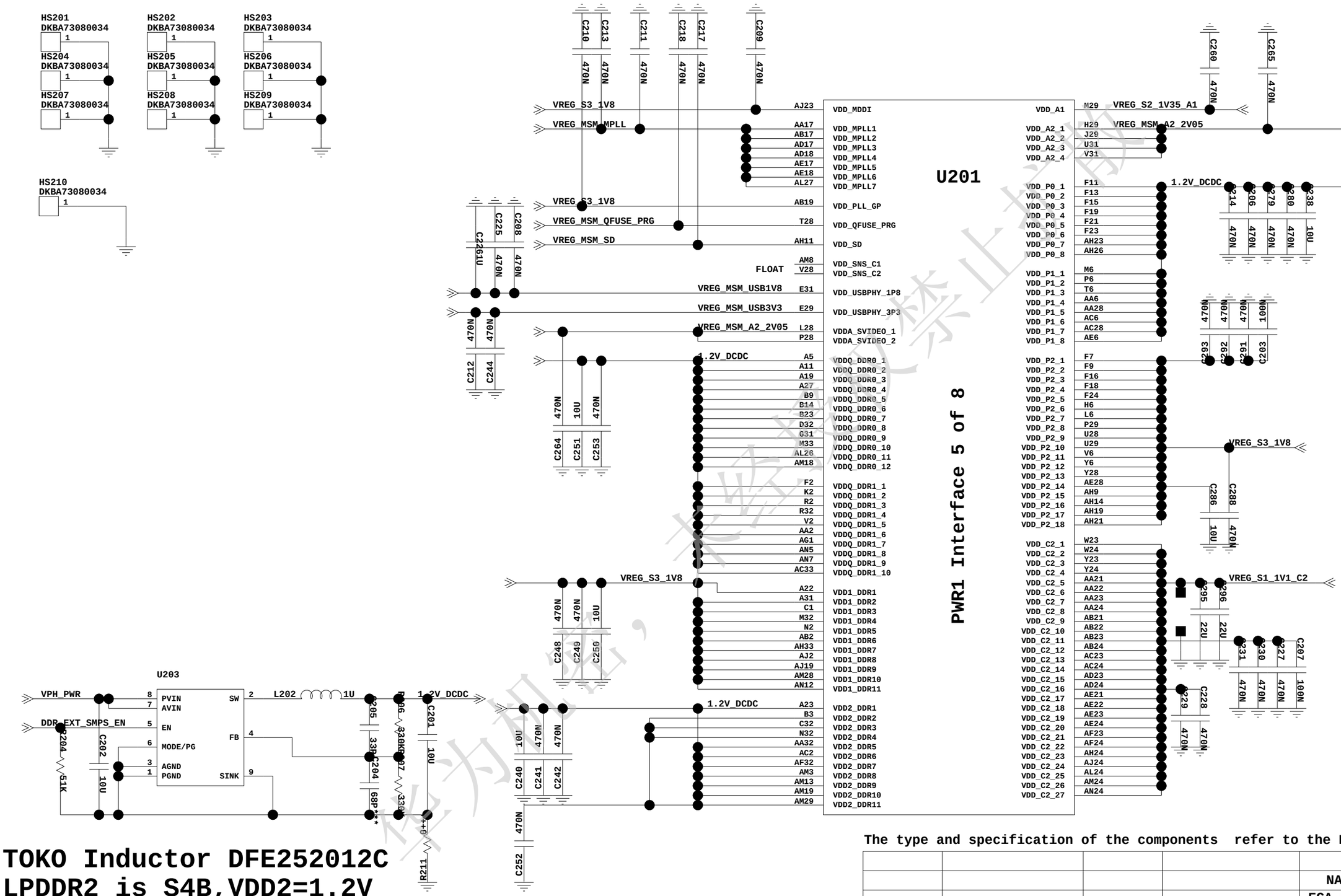


TOKO Inductor DFE252012C
LPDDR2 is S4B,VDD2=1.2V
2.2uH,30%,96mohm,ISAT=2.3A

The type and specification of the components refer to the BOM

| | | | | | |
|---|---|---|---|---|---|
| | | | | NA | 2011-7-20 |
| | | | | ECA NO | DATE |
| DESIGNED | SONGGANG/64526 | HD2U886M | | 00704566 | |
| REVIEWED | SONGGANG/64526 | | | | |
| | | VER | PART_NUMBER | SHEET 2 OF 40 | |
| | | NA | 03021HES | HUAWEI TECH CO.,LTD. | |

华为机密，未经许可禁止外传

# 3. PM8058 Power GPIO/MPP

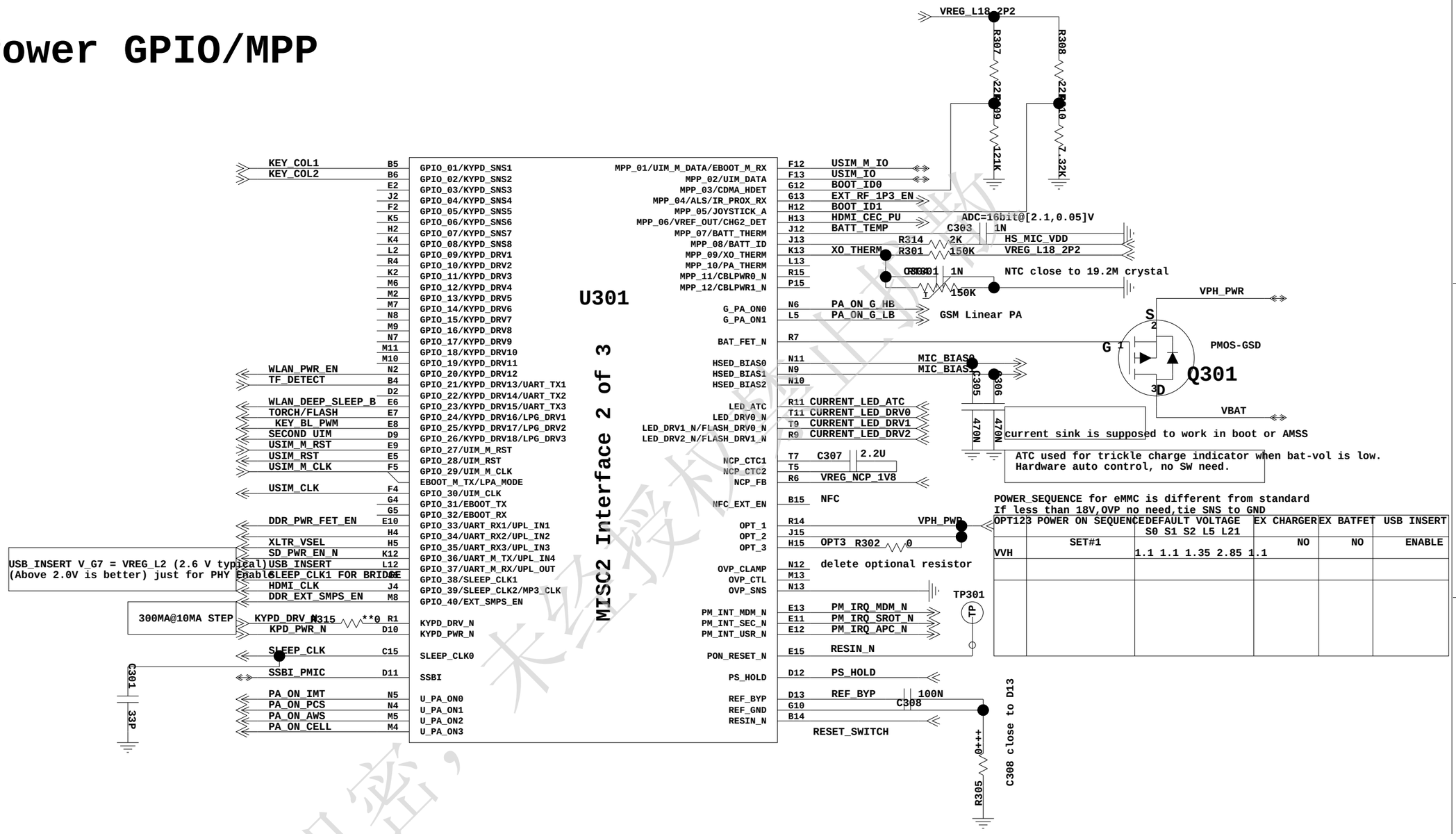


POWER_SEQUENCE for eMMC is different from standard
If less than 18V,OVP no need,tie SNS to GND

| OPT123 | POWER ON SEQUENCE | DEFAULT VOLTAGE S0 S1 S2 L5 L21 | EX CHARGER | EX BATFET | USB INSERT |
|---|---|---|---|---|---|
| VVH | SET#1 | 1.1 1.1 1.35 2.85 1.1 | NO | NO | ENABLE |
| | | | | | |
| | | | | | |

The type and specification of the components refer to the BOM

| | | | | | |
|---|---|---|---|---|---|
| | | | | NA | 2011-7-20 |
| | | | | ECA NO | DATE |
| DESIGNED | SONGGANG/64526 | HD2U886M | | 00704566 | |
| REVIEWED | SONGGANG/64526 | | | | |
| | | VER | PART_NUMBER | SHEET 3 OF 40 | |
| | | NA | 03021HES | HUAWEI TECH CO.,LTD. | |

华为机密，未经授权禁止传播

# 4. PM8058 Power Output

Default ON power out should decoupled to suppress self resonance even if no use

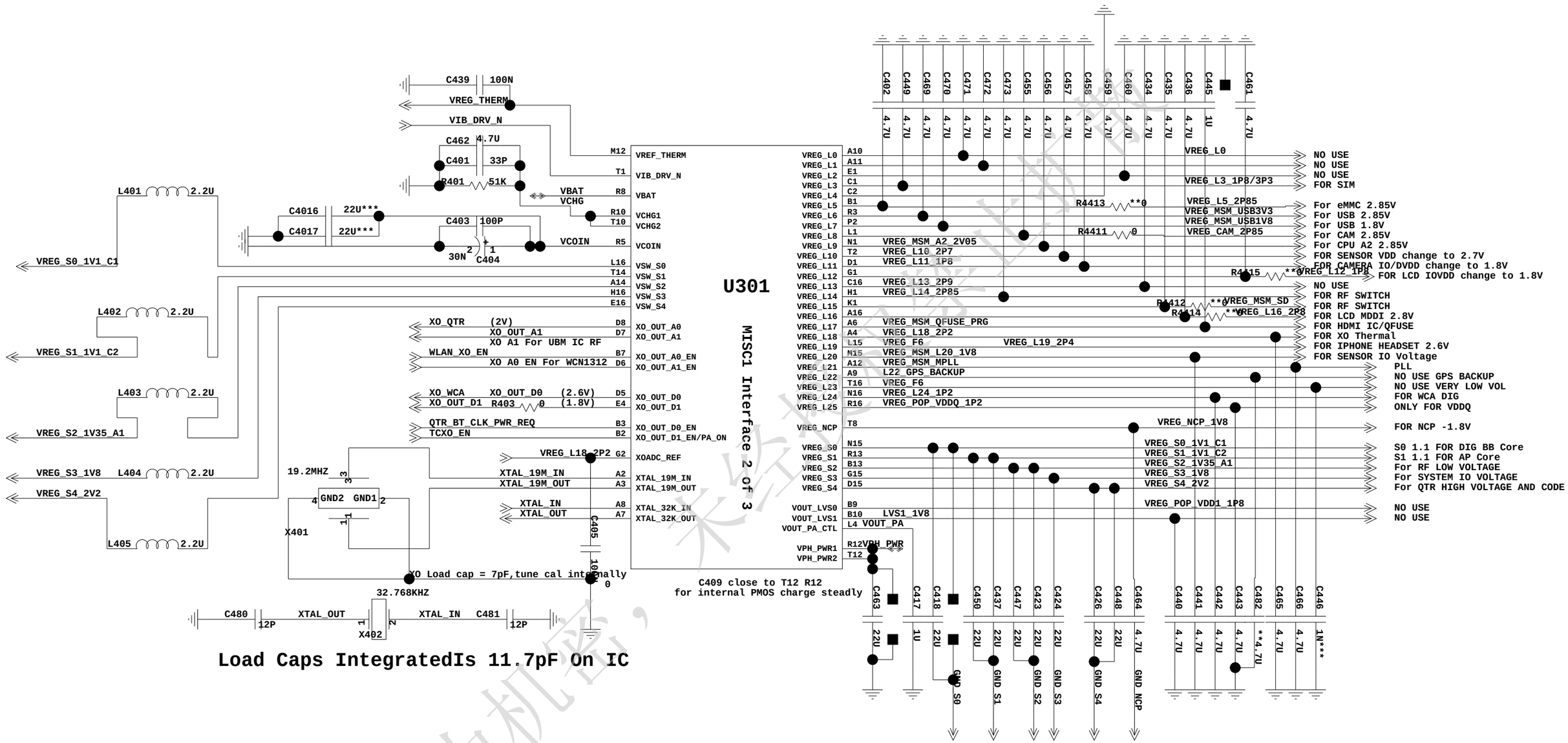


**2.2uH,30%,96mohm,ISAT=2.3A**
**TOKO Inductor DFE252012C**

The type and specification of the components refer to the BOM

| | | | | | |
|---|---|---|---|---|---|
| | | | | NA | 2011-7-20 |
| | | | | ECA NO | DATE |
| DESIGNED | SONGGANG/64526 | HD2U886M | | 00704566 | |
| REVIEWED | SONGGANG/64526 | | | | |
| | | VER | PART_NUMBER | SHEET 4 OF 40 | |
| | | NA | 03021HES | HUAWEI TECH CO.,LTD. | |

华为机密，未经授权

# 5. PM8058 Power Input

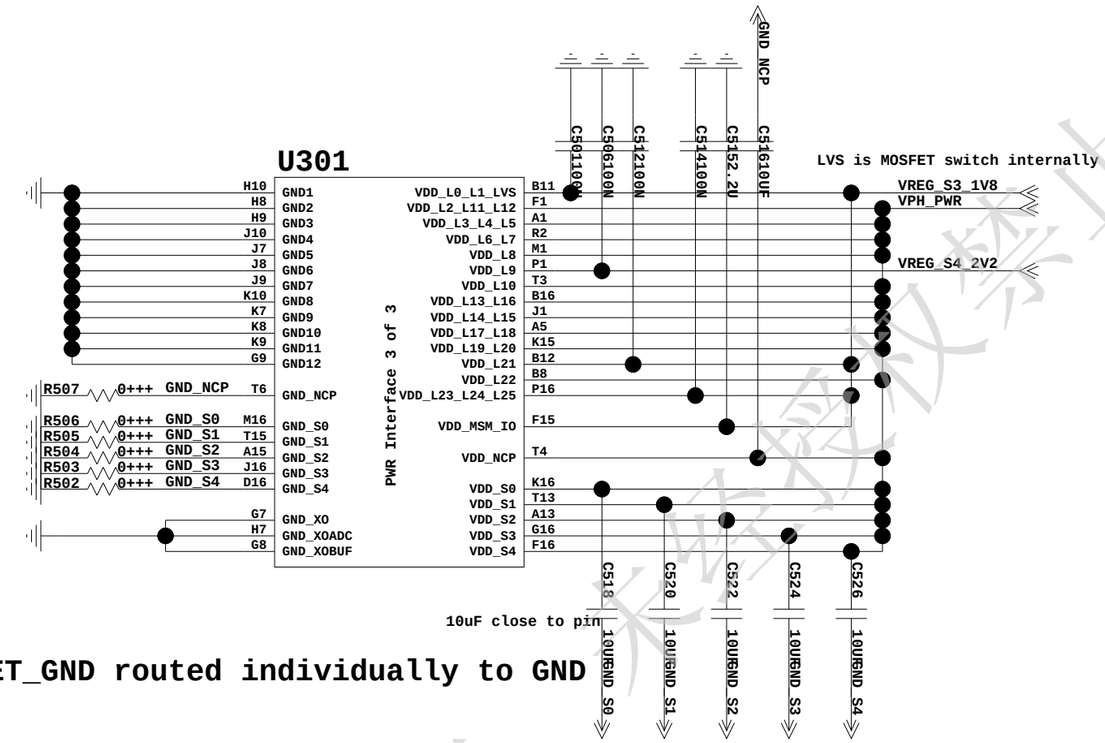


NFET_GND routed individually to GND

华为机密，未经授权禁止扩散

The type and specification of the components refer to the BOM

| | | | | | |
|---|---|---|---|---|---|
| | | | | NA | 2011-7-20 |
| | | | | ECA NO | DATE |
| DESIGNED | SONGGANG/64526 | HD2U886M | | 00704566 | |
| REVIEWED | SONGGANG/64526 | | | | |
| | | VER | PART_NUMBER | SHEET 5 OF 40 | |
| | | NA | 03021HES | HUAWEI TECH CO.,LTD. | |

# 6. Audio Circuit

## Primarily Handset MIC

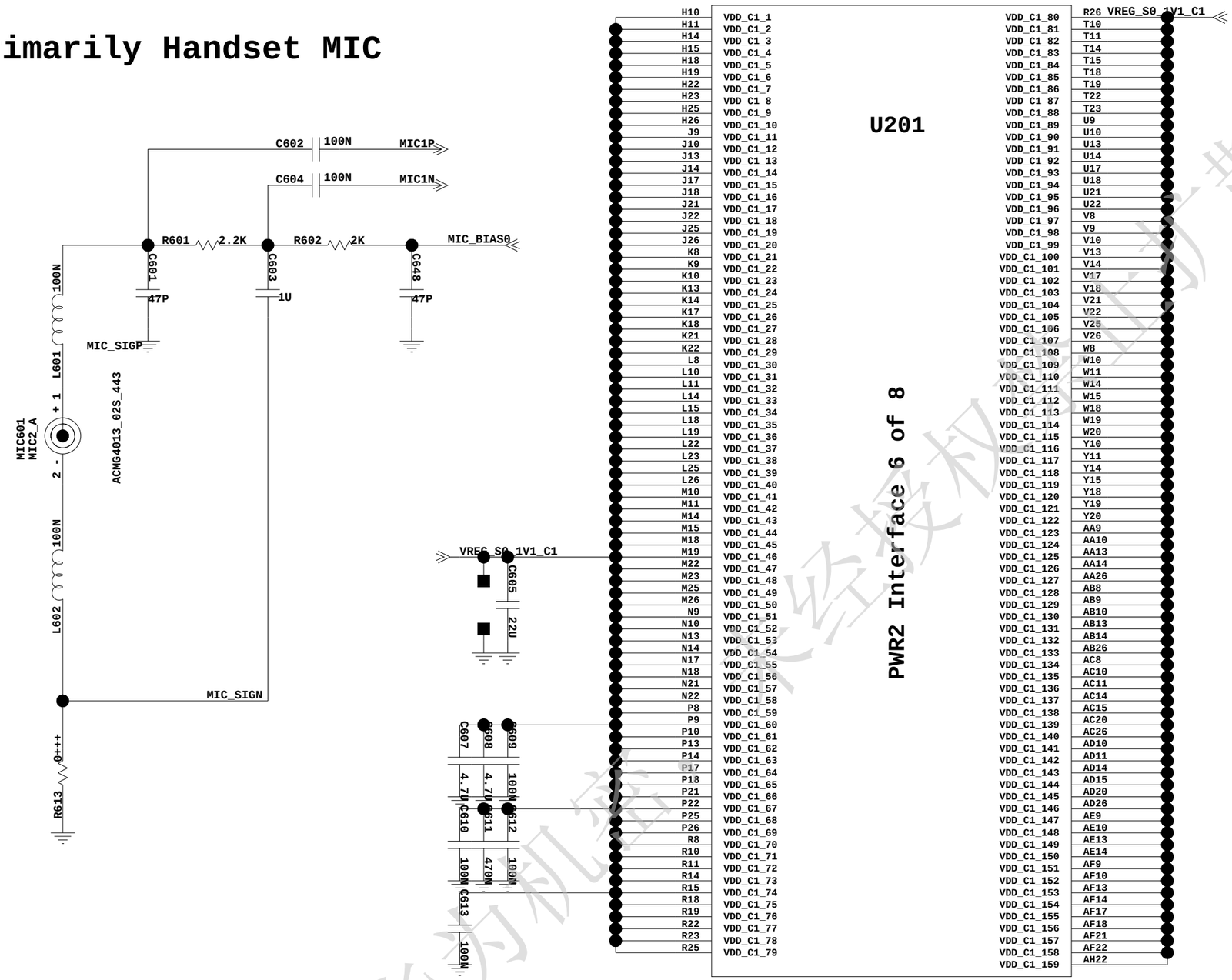


The type and specification of the components refer to the BOM

| | | | | | |
|---|---|---|---|---|---|
| | | | | NA | 2011-7-20 |
| | | | | ECA NO | DATE |
| DESIGNED | SONGGANG/64526 | HD2U886M | | 00704566 | |
| REVIEWED | SONGGANG/64526 | | | | |
| | | VER | PART_NUMBER | SHEET 6 OF 40 | |
| | | NA | 03021HES | HUAWEI TECH CO.,LTD. | |

华为机密 未经授权 不扩散

# 7.MSM7230-0 Connectivity

# For POP LPDDR2 only

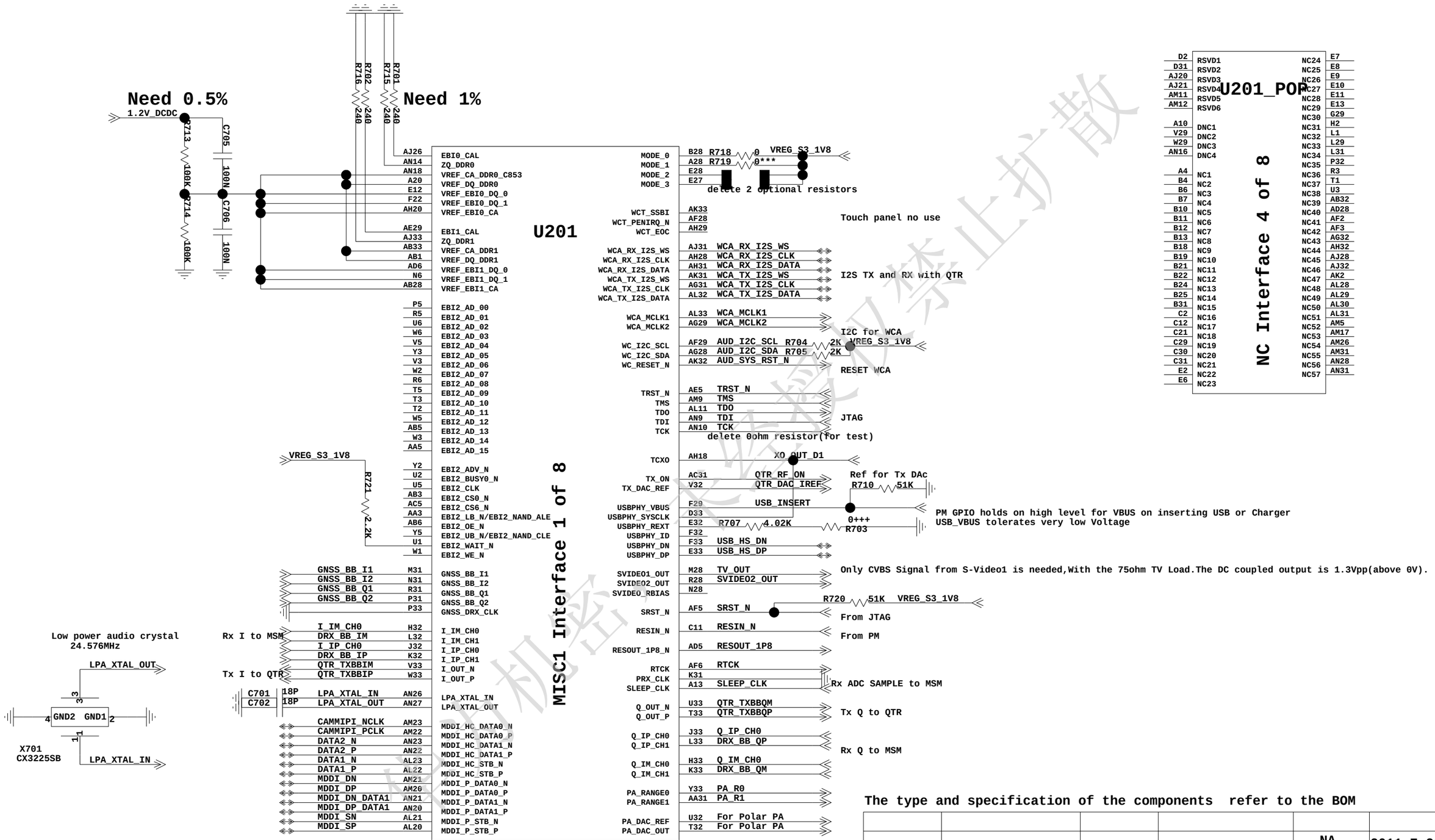


The type and specification of the components refer to the BOM

| | | | | | |
|---|---|---|---|---|---|
| | | | | NA | 2011-7-20 |
| | | | | ECA NO | DATE |
| DESIGNED | SONGGANG/64526 | HD2U886M | | 00704566 | |
| REVIEWED | SONGGANG/64526 | | | | |
| | | VER | PART_NUMBER | SHEET 7 OF 40 | |
| | | NA | 03021HES | HUAWEI TECH CO.,LTD. | |

# 8.MSM7230-0 Connectivity

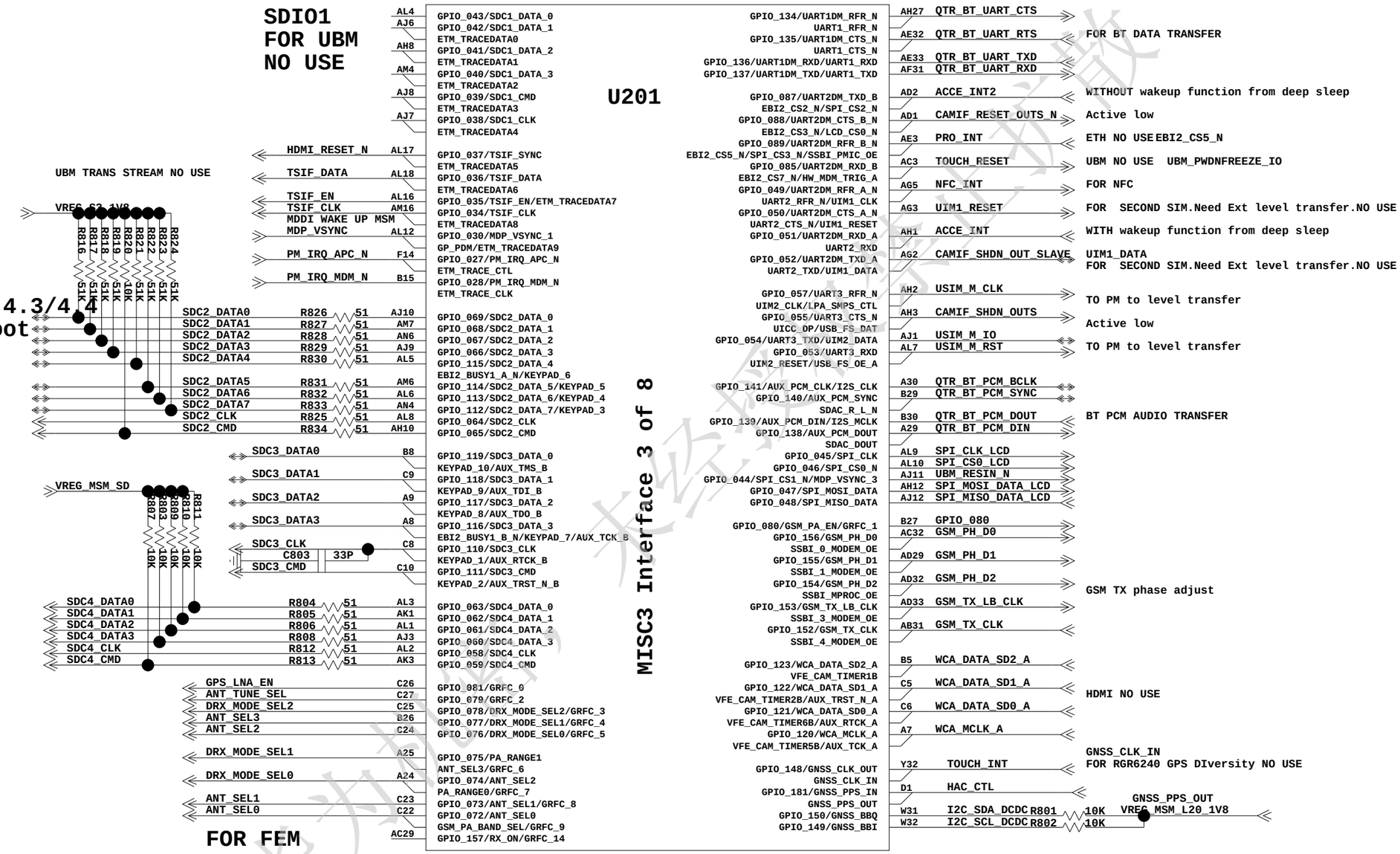


The type and specification of the components refer to the BOM

| | | | | | |
|---|---|---|---|---|---|
| | | | | NA | 2011-7-20 |
| | | | | ECA NO | DATE |
| DESIGNED | SONGGANG/64526 | HD2U886M | | 00704566 | |
| REVIEWED | SONGGANG/64526 | | | | |
| | | VER | PART_NUMBER | SHEET 8 OF 40 | |
| | | NA | 03021HES | HUAWEI TECH CO.,LTD. | |

# 9.MSM7230-0 Connectivity

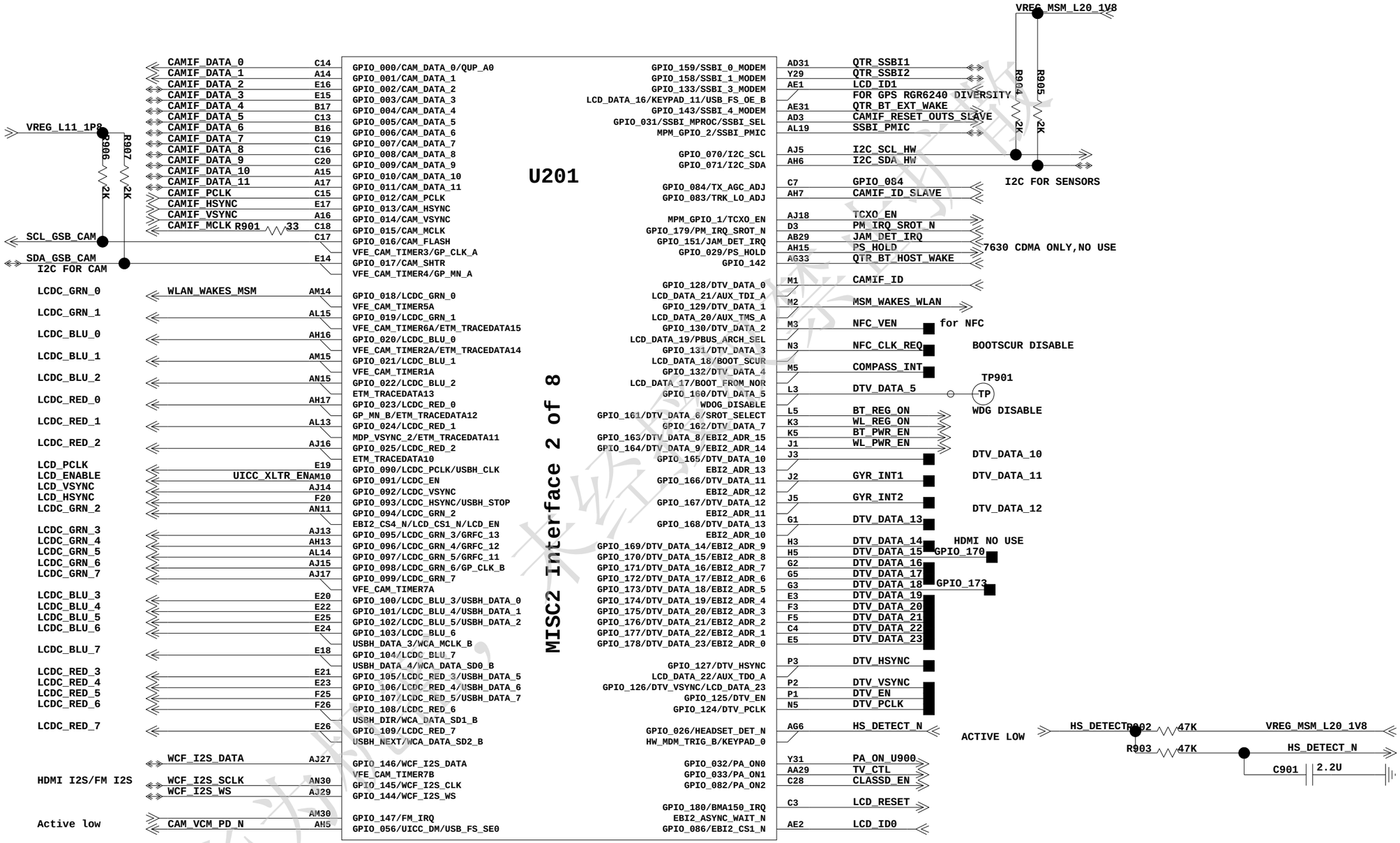


The type and specification of the components refer to the BOM

| | | | | | |
|---|---|---|---|---|---|
| | | | | NA | 2011-7-20 |
| | | | | ECA NO | DATE |
| DESIGNED | SONGGANG/64526 | HD2U886M | | 00704566 | |
| REVIEWED | SONGGANG/64526 | | | | |
| | | VER | PART_NUMBER | SHEET 9 OF 40 | |
| | | NA | 03021HES | HUAWEI TECH CO.,LTD. | |

# 10.Power Manager for 1A Charger

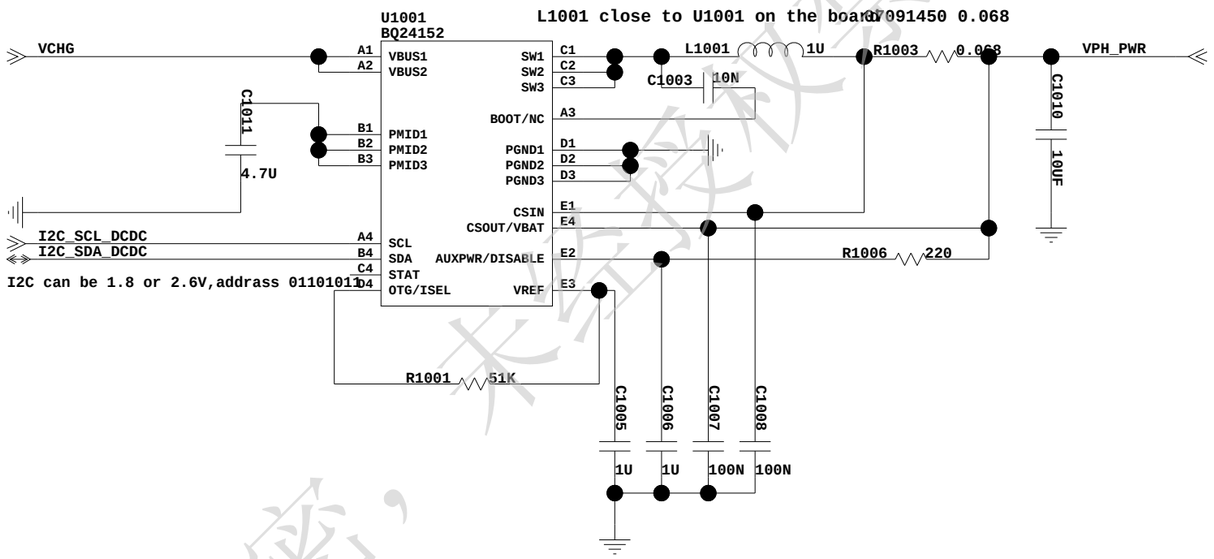


The type and specification of the components refer to the BOM

| | | | | | |
|---|---|---|---|---|---|
| | | | | NA | 2011-7-20 |
| | | | | ECA NO | DATE |
| DESIGNED | SONGGANG/64526 | HD2U886M | | 00704566 | |
| REVIEWED | SONGGANG/64526 | | | | |
| | | VER | PART_NUMBER | SHEET 10 OF 40 | |
| | | NA | 03021HES | HUAWEI TECH CO.,LTD. | |

华为机密，未经授权禁止扩散

# 11. Connector For SUB Board

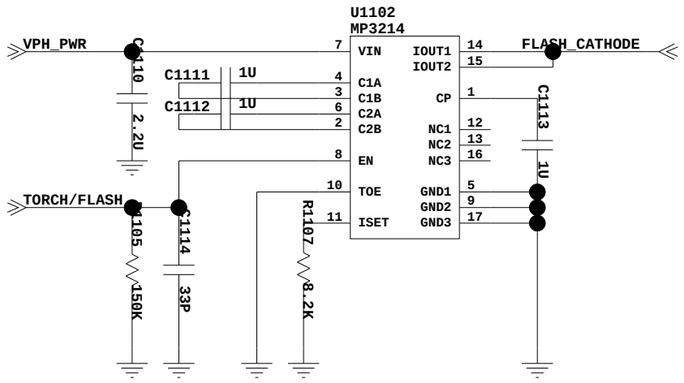


output current is set by R1107 (12k-300mA)

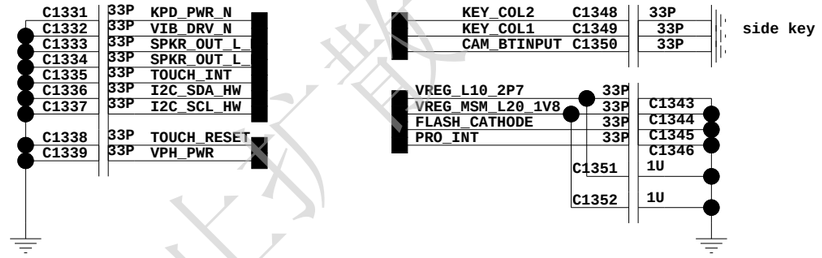


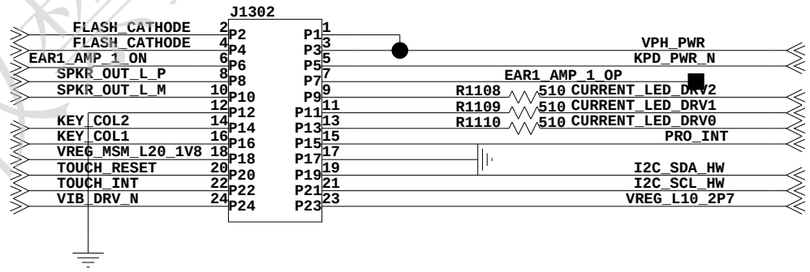


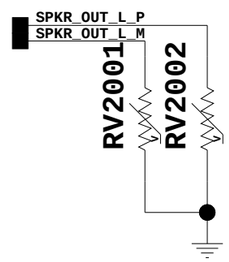


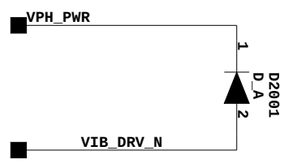


The type and specification of the components refer to the BOM

| | | | | | |
|---|---|---|---|---|---|
| | | | | NA | 2011-7-20 |
| | | | | ECA NO | DATE |
| DESIGNED | SONGGANG/64526 | HD2U886M | | 00704566 | |
| REVIEWED | SONGGANG/64526 | | | | |
| | | VER | PART_NUMBER | SHEET 11 OF 40 | |
| | | NA | 03021HES | HUAWEI TECH CO.,LTD. | |

华为机密，未经授权禁止扩散

# 12. LCD interface

## LCD ID CONFIRM
## LCD MDDI-II
## LCD Power Default OFF

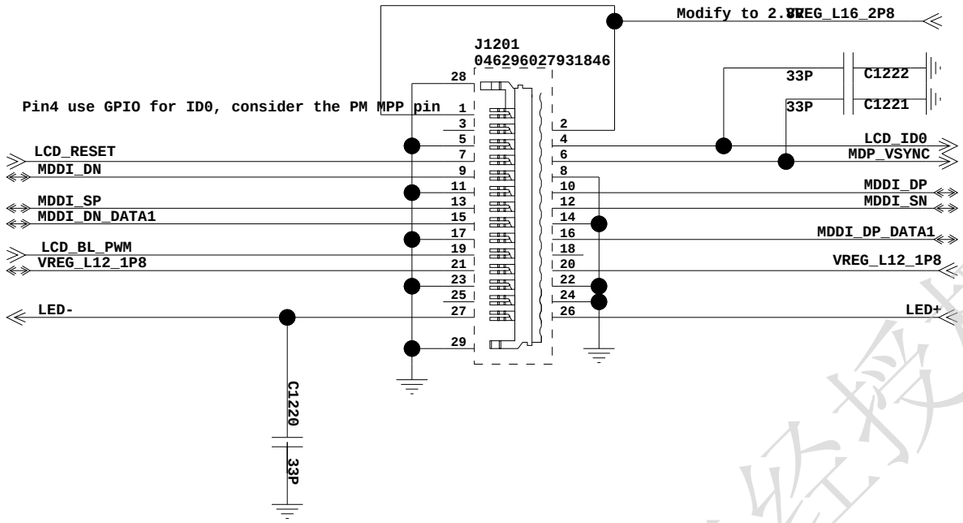


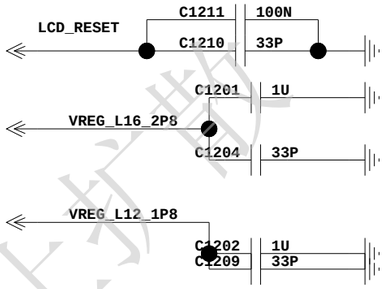


华为机密，未经授权禁止扩散

The type and specification of the components refer to the BOM

| | | | | | |
|---|---|---|---|---|---|
| | | | | NA | 2011-7-20 |
| | | | | ECA NO | DATE |
| DESIGNED | SONGGANG/64526 | HD2U886M | | 00704566 | |
| REVIEWED | SONGGANG/64526 | | | | |
| | | VER | PART_NUMBER | SHEET 12 OF 40 | |
| | | NA | 03021HES | HUAWEI TECH CO.,LTD. | |

# 13.Earphone

**Filter out GSM Tx bursts**

**Due to long lines and connector add FM AMP**

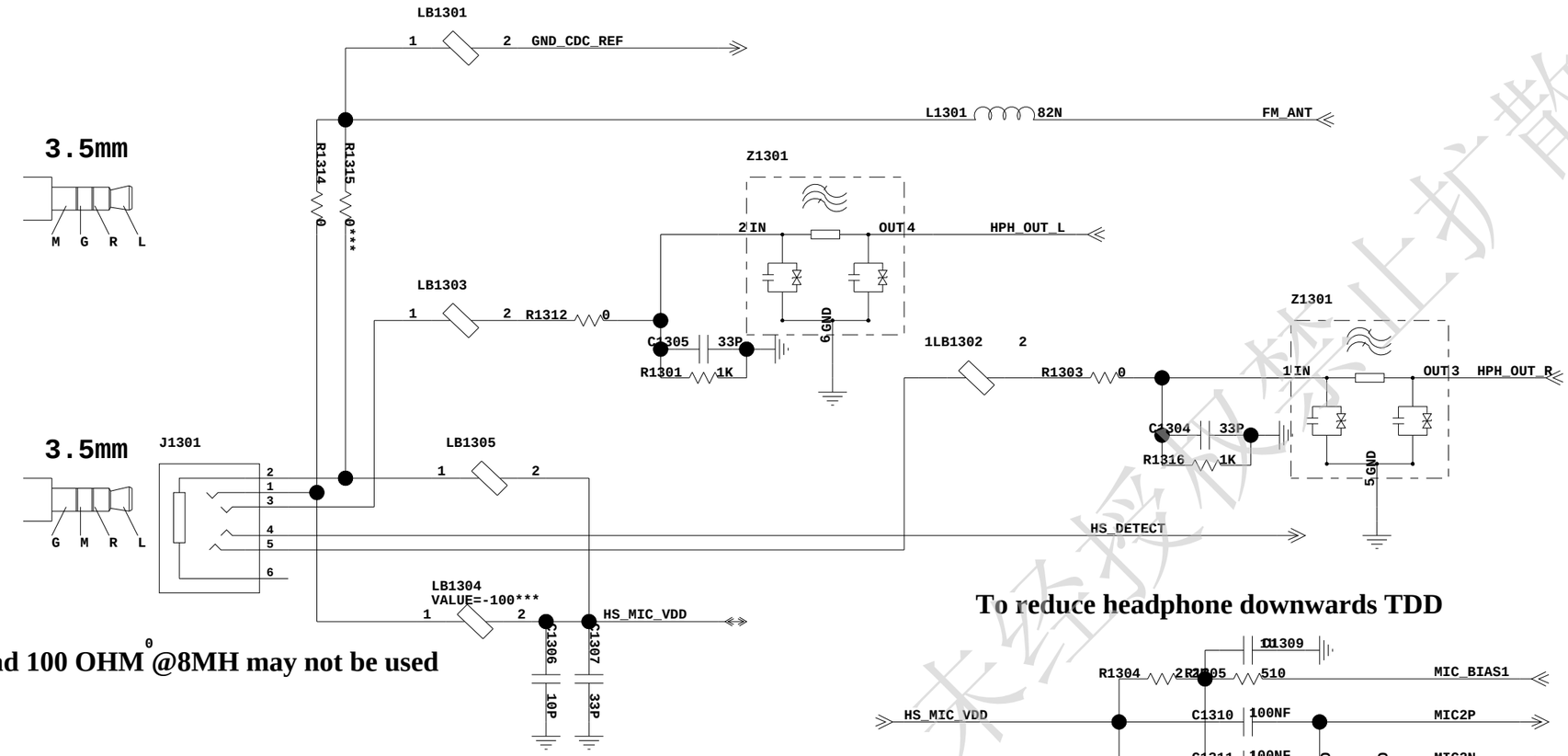


**Bead 100 OHM @8MH may not be used**

**To reduce headphone downwards TDD**

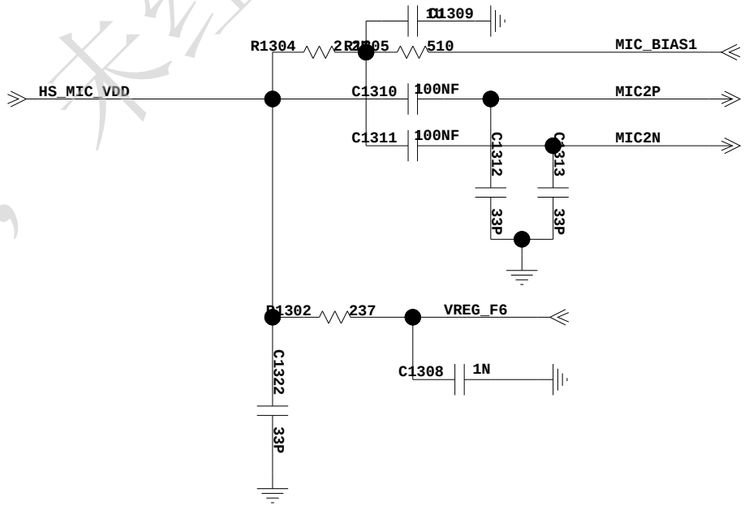


## Jack ESD Protect

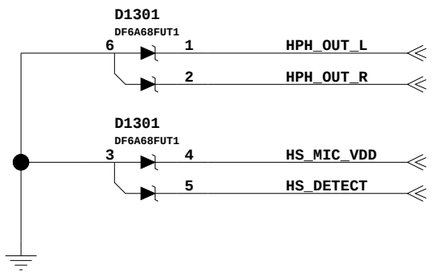


The type and specification of the components refer to the BOM

| | | | | | |
|---|---|---|---|---|---|
| | | | | NA | 2011-7-20 |
| | | | | ECA NO | DATE |
| DESIGNED | SONGGANG/64526 | HD2U886M | | 00704566 | |
| REVIEWED | SONGGANG/64526 | | | | |
| | | VER | PART_NUMBER | SHEET 13 OF 40 | |
| | | NA | 03021HES | HUAWEI TECH CO.,LTD. | |

华为机密，未经授权禁止扩散

# 14. G-Senosrs/Compass

## Accelerometer

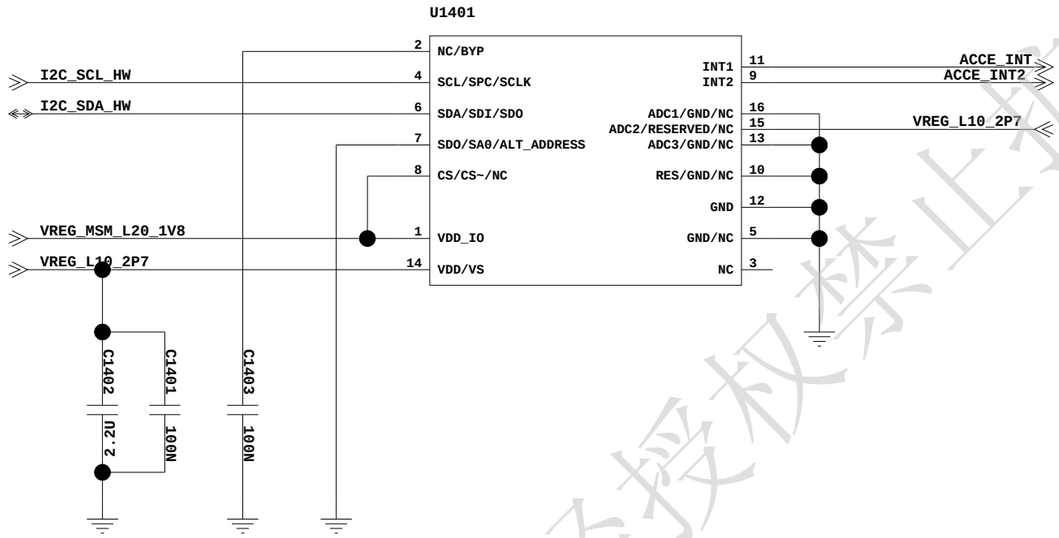


## Compass

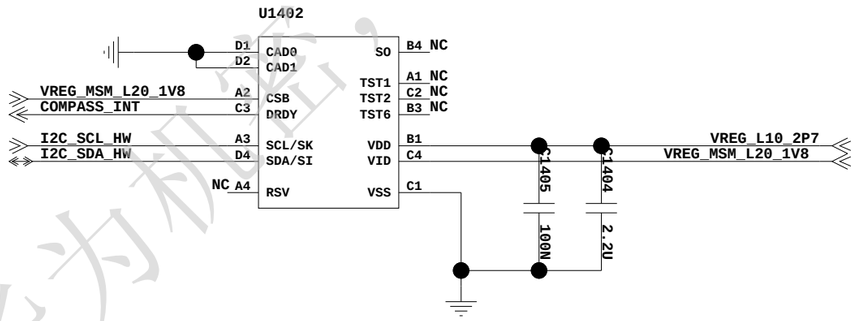


华为机密，未经授权禁止扩散

The type and specification of the components refer to the BOM

| | | | | | |
|---|---|---|---|---|---|
| | | | | NA | 2011-7-20 |
| | | | | ECA NO | DATE |
| DESIGNED | SONGGANG/64526 | HD2U886M | | 00704566 | |
| REVIEWED | SONGGANG/64526 | | | | |
| | | VER | PART_NUMBER | SHEET 14 OF 40 | |
| | | NA | 03021HES | HUAWEI TECH CO.,LTD. | |

# 15. Battery Connector/ Micro USB

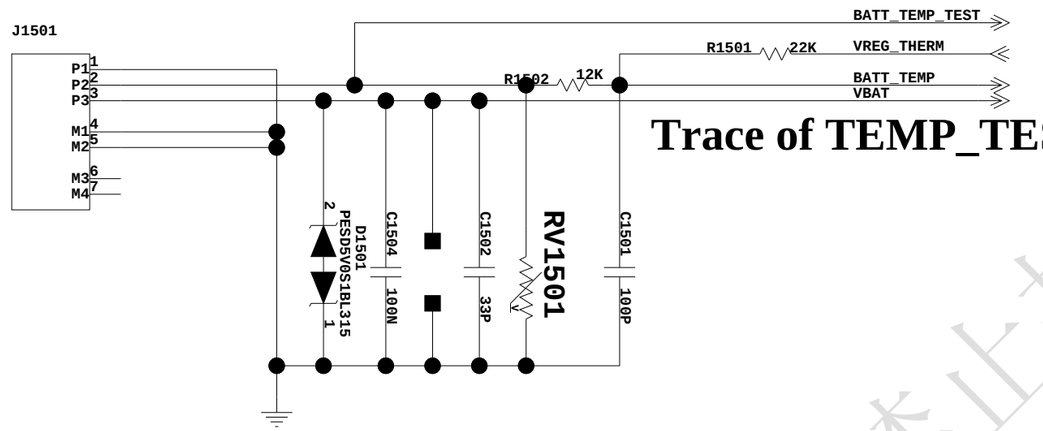


**Trace of TEMP_TEST be wide!**

**1500mAh**

**10K NTC = Murata NCP18XV103J03RB**

| | 71% | 74% | 75% |
|---|---|---|---|
| -10 deg | 49.263 | 54.5638 | 60.2838 |
| +50 deg | 3.35 | 3.635 | 3.9344 |

| 38% | 39% | 40% |
|---|---|---|

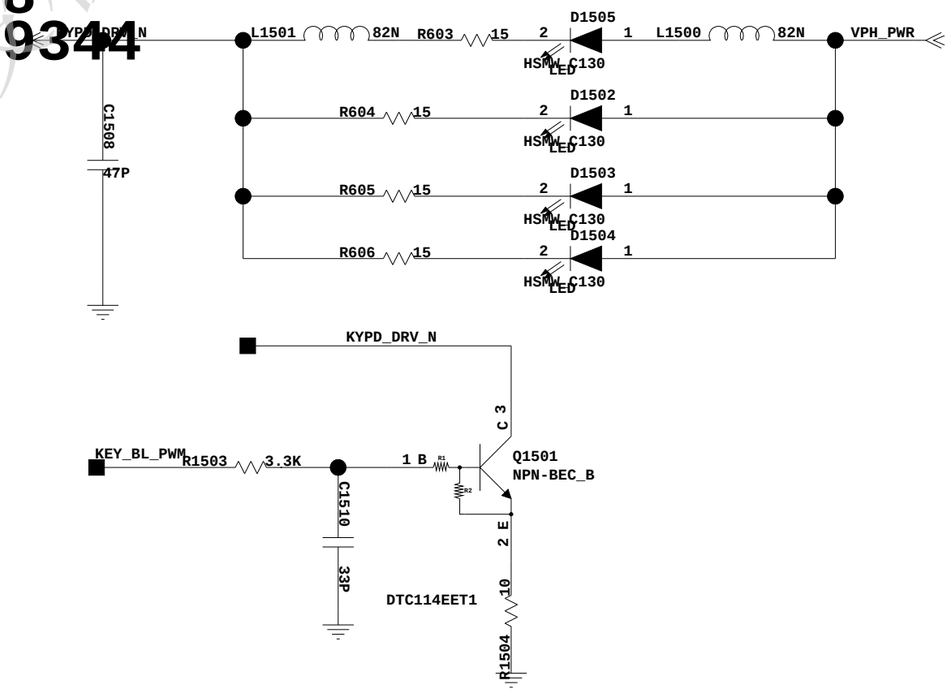


## Micro USB Connector

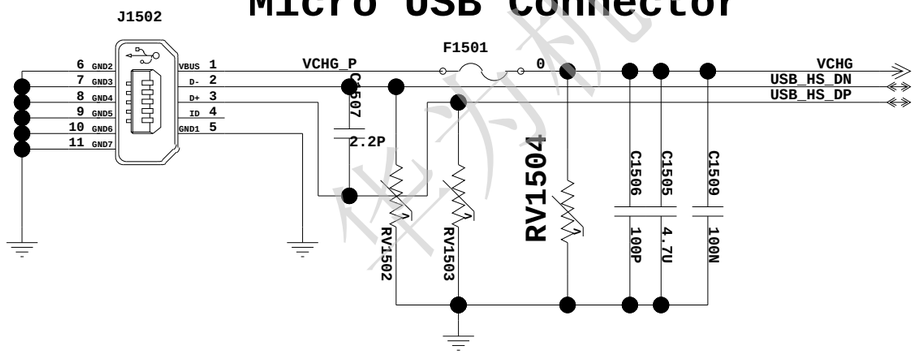


The type and specification of the components refer to the BOM

| | | | | | |
|---|---|---|---|---|---|
| | | | | NA | 2011-7-20 |
| | | | | ECA NO | DATE |
| DESIGNED | SONGGANG/64526 | HD2U886M | | 00704566 | |
| REVIEWED | SONGGANG/64526 | | | | |
| | | VER | PART_NUMBER | SHEET 15 OF 40 | |
| | | NA | 03021HES | HUAWEI TECH CO.,LTD. | |

华为机密，未经授权禁止扩散

# 16. SIM/TF CARD

## SIM Card

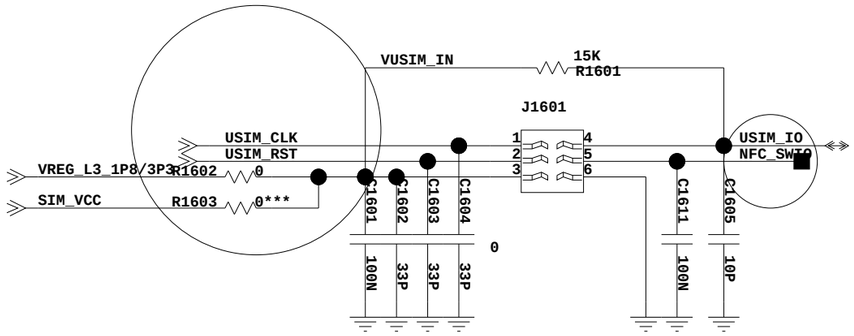


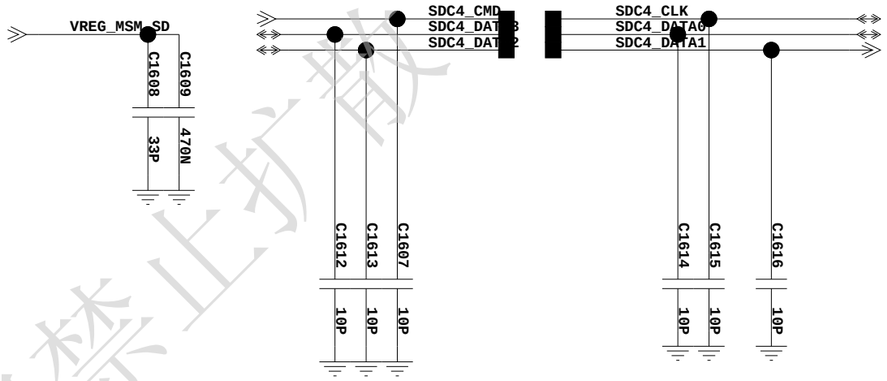


## SIM Card ESD Protect

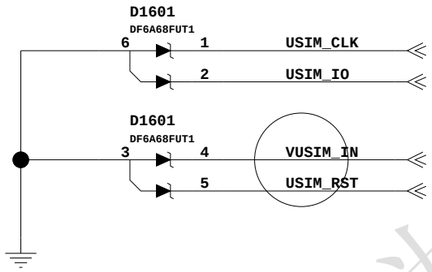


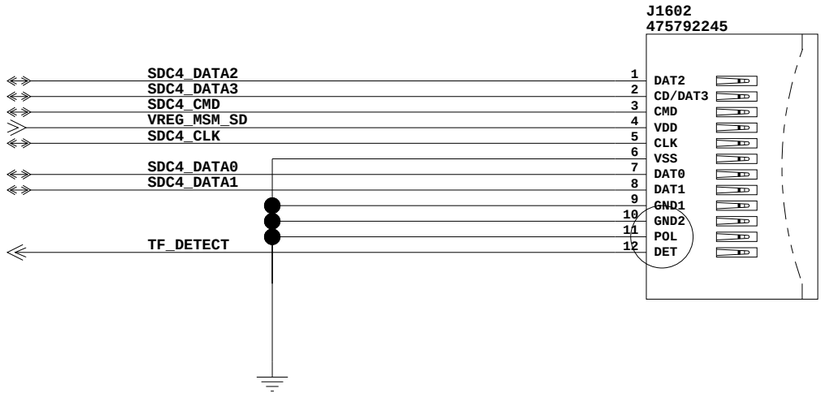


华为机密，未经授权禁止扩散

The type and specification of the components refer to the BOM

| | | | | | |
|---|---|---|---|---|---|
| | | | | NA | 2011-7-20 |
| | | | | ECA NO | DATE |
| DESIGNED | SONGGANG/64526 | HD2U886M | | 00704566 | |
| | | | | | |
| REVIEWED | SONGGANG/64526 | | | | |
| | | VER | PART_NUMBER | SHEET 16 OF 40 | |
| | | NA | 03021HES | HUAWEI TECH CO.,LTD. | |

# 17. 4GB eMMC AND LPDDR2

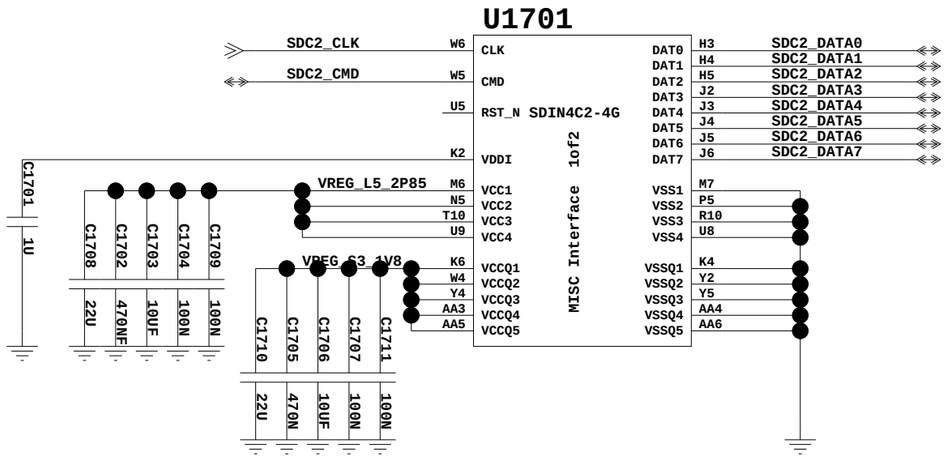


## 12*16
## Need to Cover shield

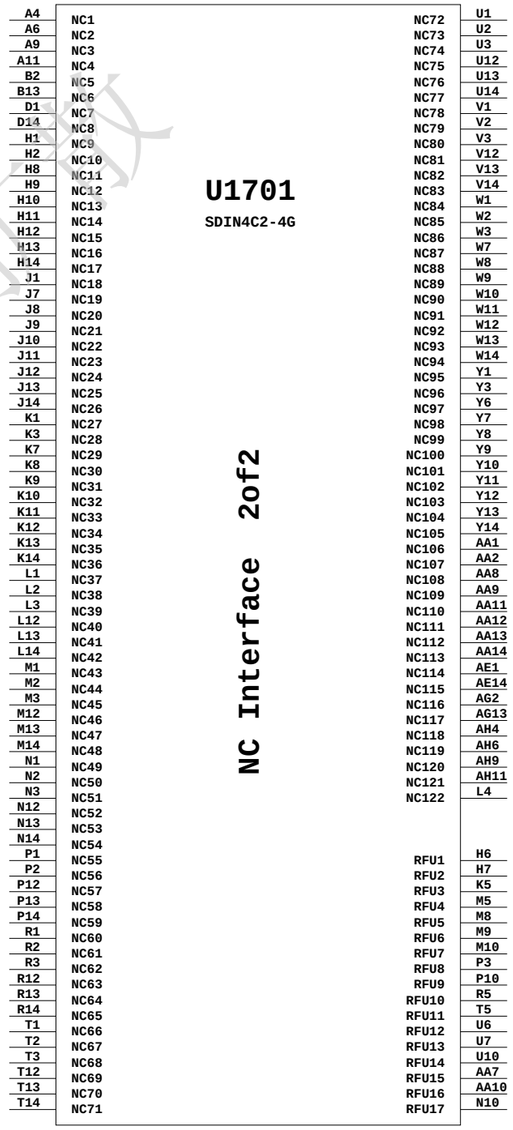


华为机密，未经授权禁止扩散

The type and specification of the components refer to the BOM

| | | | | | |
|---|---|---|---|---|---|
| | | | | | |
| | | | | NA | 2011-7-20 |
| | | | | ECA NO | DATE |
| DESIGNED | SONGGANG/64526 | HD2U886M | | 00704566 | |
| | | | | 17 | |
| REVIEWED | SONGGANG/64526 | | | | |
| | | VER | PART_NUMBER | SHEET 17 OF 40 | |
| | | NA | 03021HES | HUAWEI TECH CO.,LTD. | |

# 18. Test Points/GND/Shields

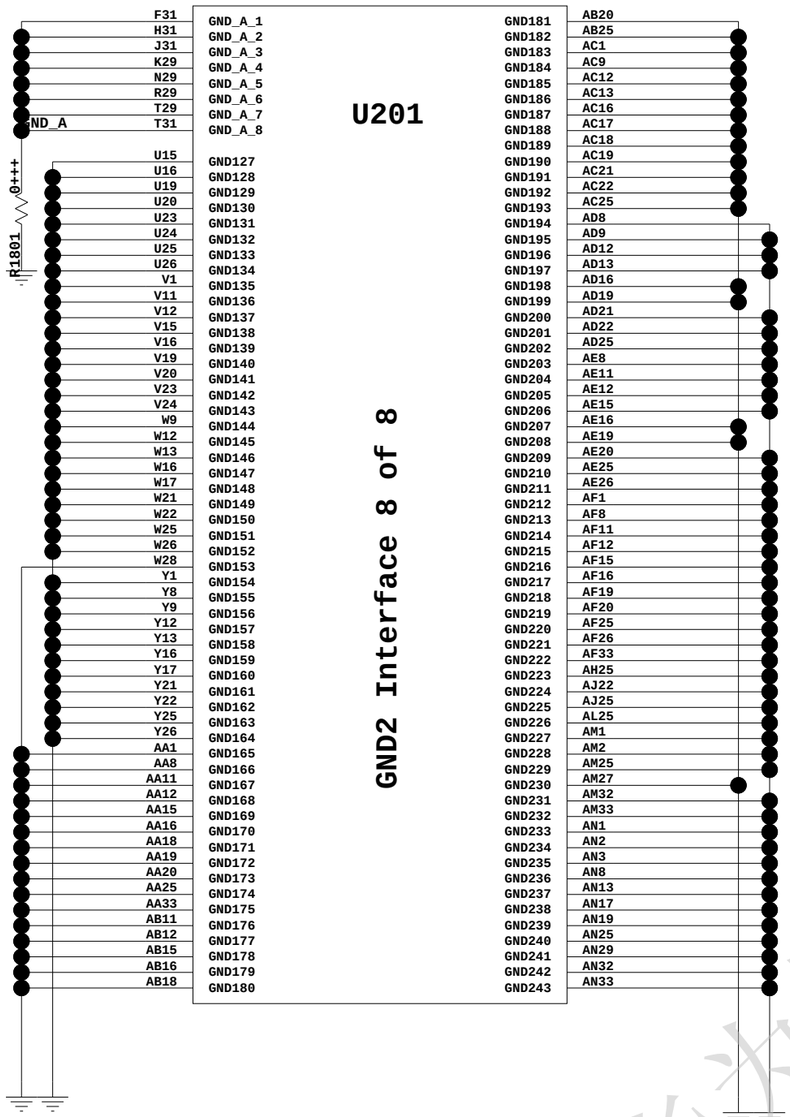


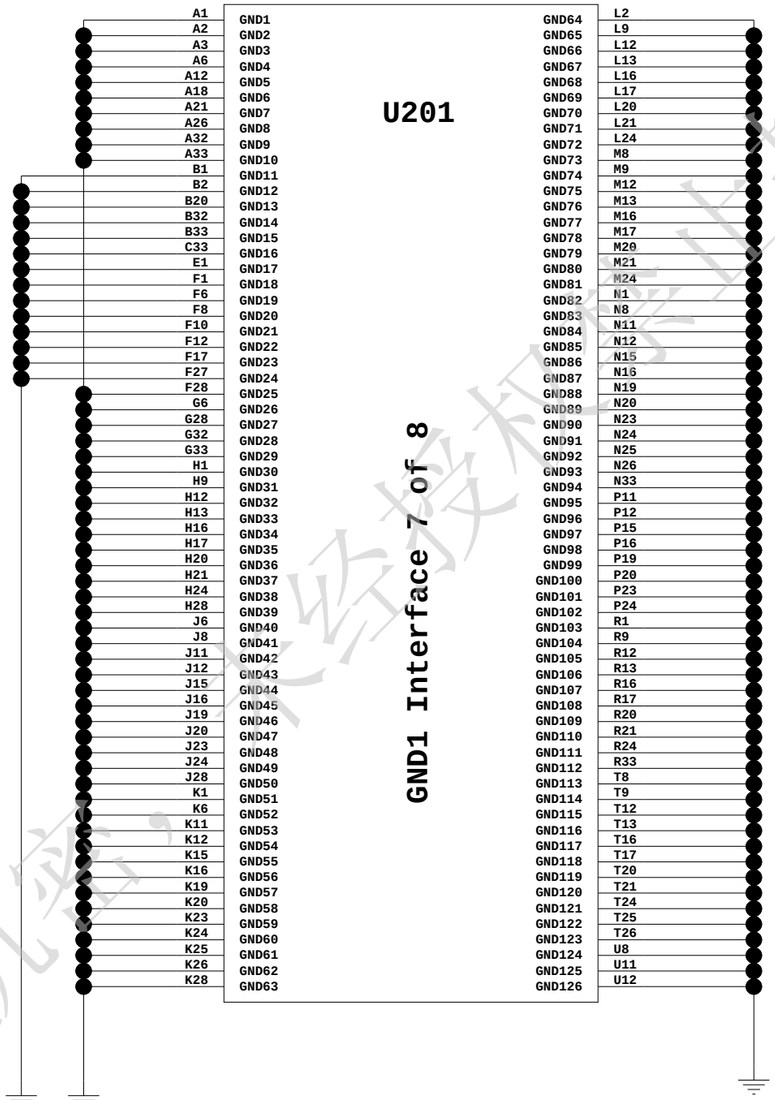


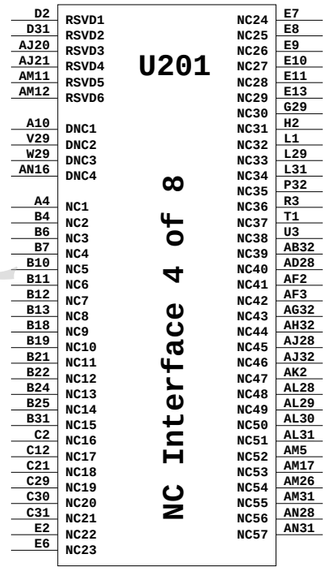


## TEST POINT for CT and BT

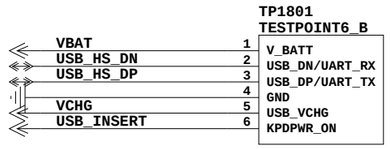


## TEST POINT for debug

## TEST POINT For JTAG

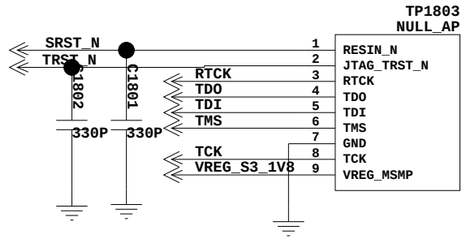


The type and specification of the components refer to the BOM

| | | | | | |
|---|---|---|---|---|---|
| | | | | NA | 2011-7-20 |
| | | | | ECA NO | DATE |
| DESIGNED | SONGGANG/64526 | HD2U886M | | 00704566 | |
| REVIEWED | SONGGANG/64526 | | | | |
| | | VER | PART_NUMBER | SHEET 18 OF 40 | |
| | | NA | 03021HES | HUAWEI TECH CO.,LTD. | |

华为机密，未经授权不得扩散

# 19. 8 Mega and 2 Mega Camera

## MAIN CAMERA 8

8 Mega

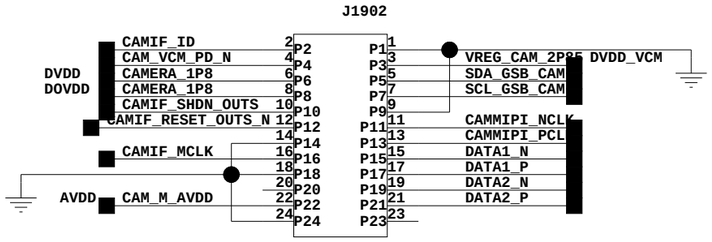


## slave CAMERA 2MFF

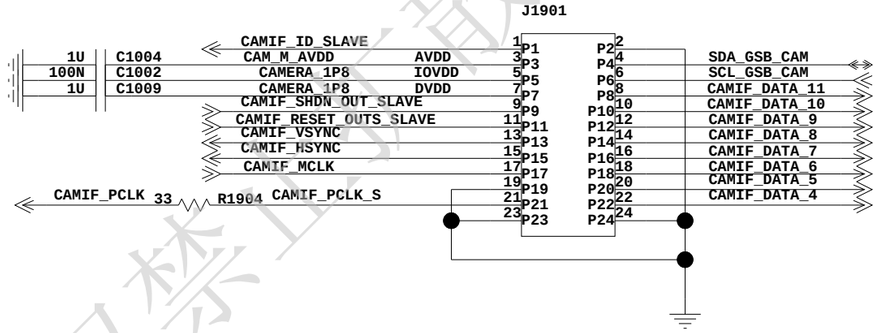


## POWER CLOSE TO MAIN CAMERA

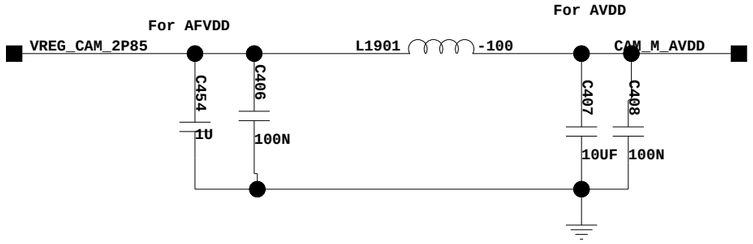


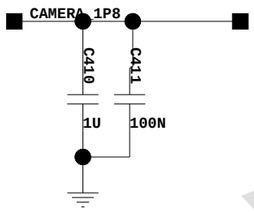


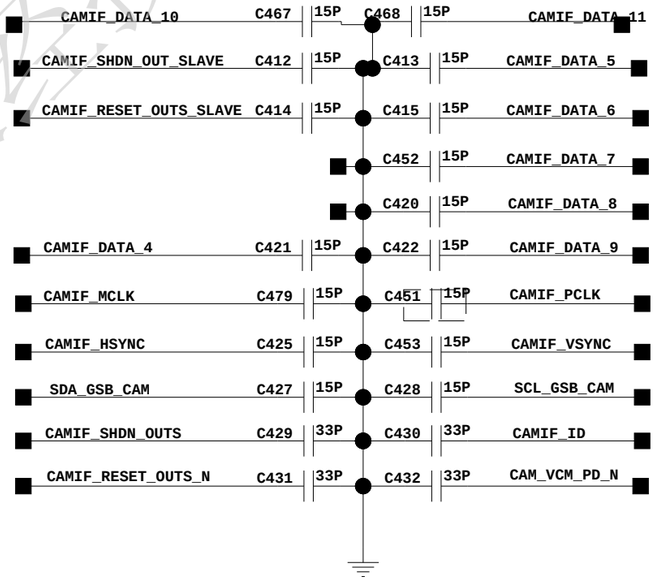


华为机密，未经授权禁止扩散

The type and specification of the components refer to the BOM

| | | | | | |
|---|---|---|---|---|---|
| | | | | NA | 2011-7-20 |
| | | | | ECA NO | DATE |
| DESIGNED | SONGGANG/64526 | HD2U886M | | 00704566 | |
| REVIEWED | SONGGANG/64526 | | | | |
| | | VER | PART_NUMBER | SHEET 19 OF 40 | |
| | | NA | 03021HES | HUAWEI TECH CO.,LTD. | |

# 20. Audio Circuits

driver close to SPK

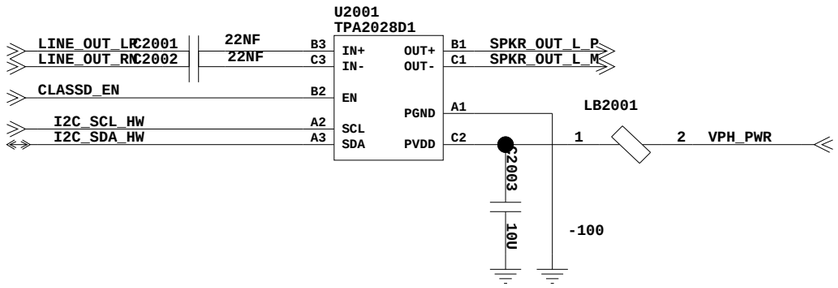


Second Handset MIC for dual mic noise suppression

If trace long(50mm),Ferrite or L &cap may be added
FC for H BAND LC for L BAND
Ferrite = 10100150

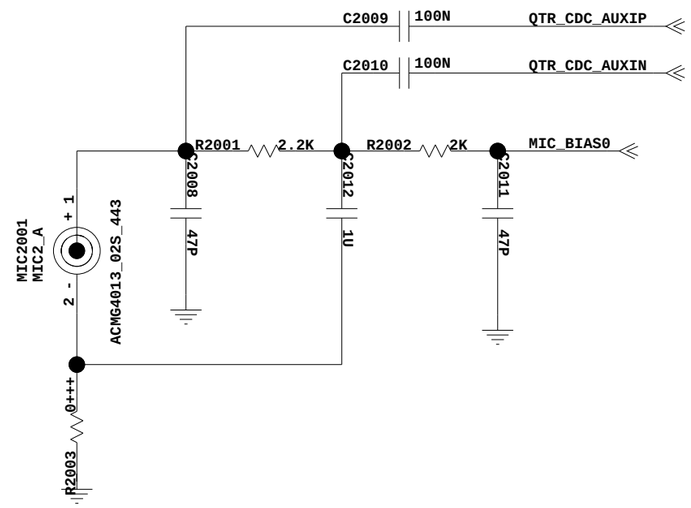


Receiver close to A conver insert metal

For different vendor different wire direction

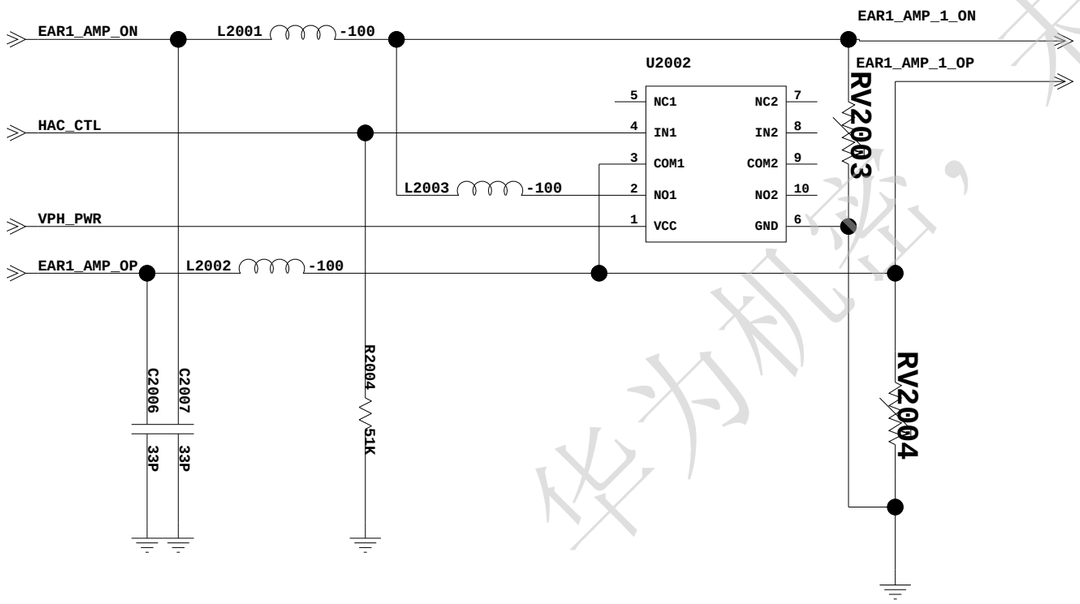


The type and specification of the components refer to the BOM

| | | | | | |
|---|---|---|---|---|---|
| | | | | | |
| | | | | NA | 2011-7-20 |
| | | | | ECA NO | DATE |
| DESIGNED | SONGGANG/64526 | HD2U886M | | 00704566 | |
| | | | | | |
| REVIEWED | SONGGANG/64526 | | | | |
| | | VER | PART_NUMBER | SHEET 20 OF 40 | |
| | | NA | 03021HES | HUAWEI TECH CO.,LTD. | |

华为机密，未经授权禁止扩散

# 21. Gyroscope

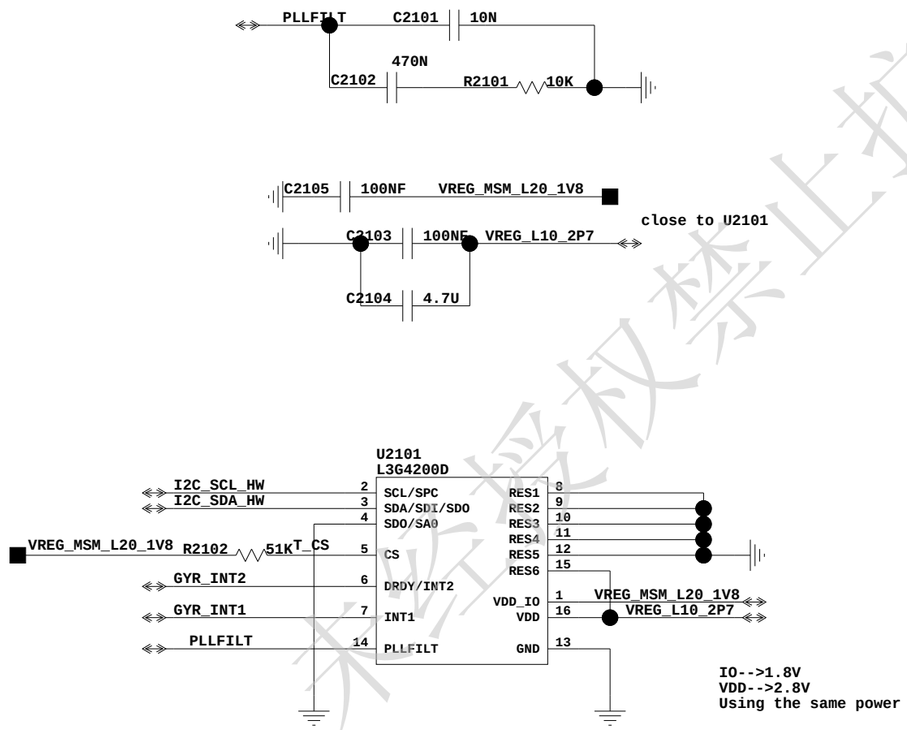


华为机密，未经授权禁止扩散

The type and specification of the components refer to the BOM

| | | | | | |
|---|---|---|---|---|---|
| | | | | NA | 2011-7-20 |
| | | | | ECA NO | DATE |
| DESIGNED | SONGGANG/64526 | HD2U886M | | 00704566 | |
| REVIEWED | SONGGANG/64526 | | | | |
| | | VER | PART_NUMBER | SHEET 21 OF 40 | |
| | | NA | 03021HES | HUAWEI TECH CO.,LTD. | |

# 22. RF INPUT OUPUT PORTS


22 RF INPUT OUPUT PORTS
21 19.2MHz VCTCXO
24 Antenna Switchplexer
25. WCDMA Band1 Power Amplifier
26. WCDMA Band(5)/8 Power Amplifier
27. WCDMA Band (2)/4 Power Amplifier
28. GSM Linear_PA
29. RX MATCHING CIRCUIT
30. QTR8615_CELL_SIGNALS
31. QTR8615 BACKUP GPS PWR OPTION
32. QTR8615 POWER DISTRIBUTION
33.GPS
34. BCM4329
36. DIV


华为机密，未经授权禁止扩散

The type and specification of the components refer to the BOM

| | | | | | |
|---|---|---|---|---|---|
| | | | | NA | 2011-7-20 |
| | | | | ECA NO | DATE |
| DESIGNED | SONGGANG/64526 | HD2U886M | | 00704566 | |
| | | | | | |
| REVIEWED | SONGGANG/64526 | | | | |
| | | VER | PART_NUMBER | SHEET 22 OF 40 | |
| | | NA | 03021HES | HUAWEI TECH CO.,LTD. | |

# 23. NFC

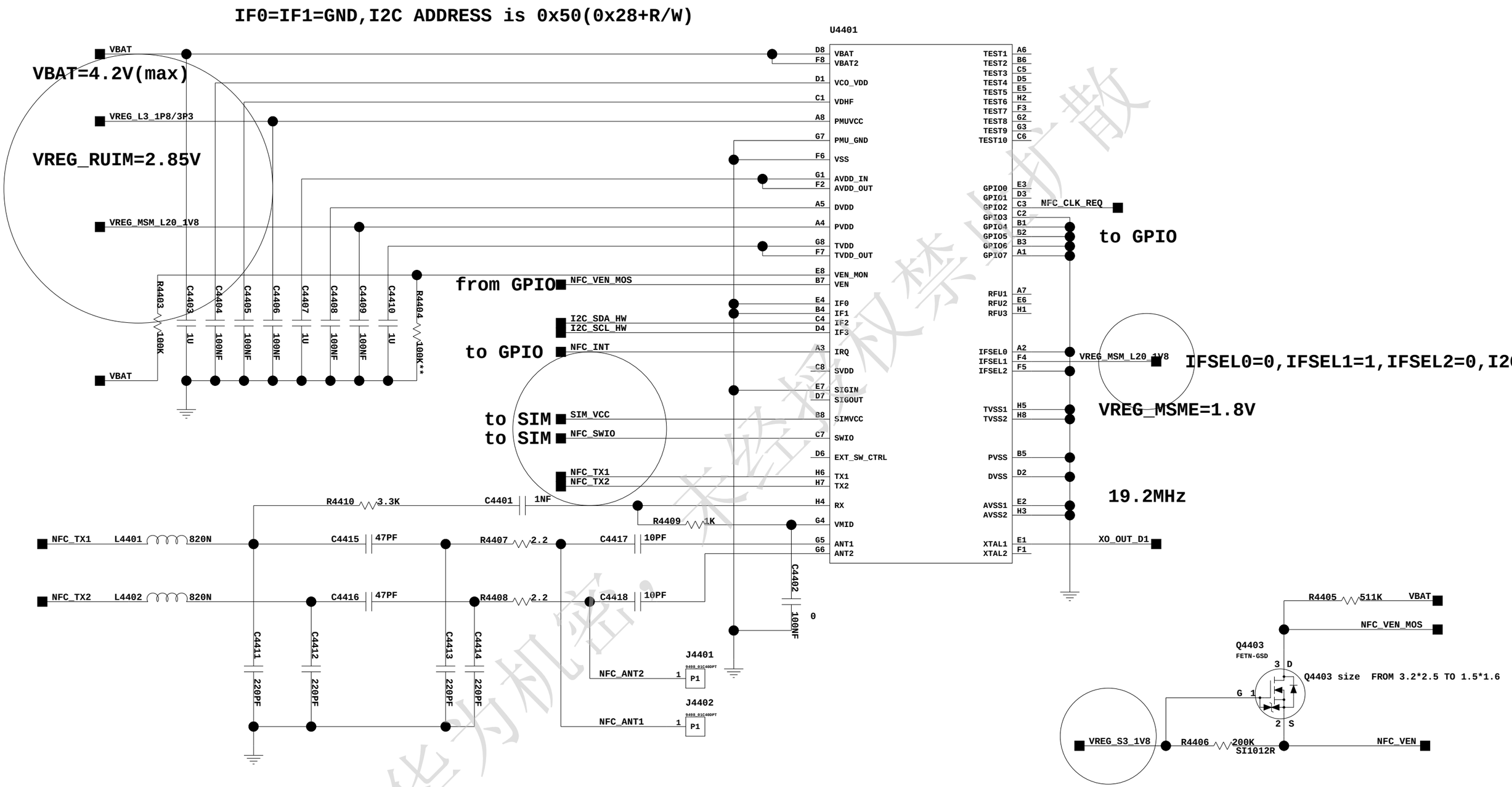


The type and specification of the components refer to the BOM

| | | | | | |
|---|---|---|---|---|---|
| | | | | NA | 2011-7-20 |
| | | | | ECA NO | DATE |
| DESIGNED | SONGGANG/64526 | HD2U886M | | 00704566 | |
| REVIEWED | SONGGANG/64526 | | | | |
| | | VER | PART_NUMBER | SHEET 23 OF 40 | |
| | | NA | 03021HES | HUAWEI TECH CO.,LTD. | |

华为机密，未经授权禁止扩散

# 24. Antenna Switchplexer

| MODE | TX FREQ | RX FREQ | PWR CLASS | PWR |
|---|---|---|---|---|
| GSM850 | 824-849 | 869-894 | 4 | 33 |
| GSM900 | 880-915 | 925-960 | 4 | 33 |
| GSM1800 | 1710-1785 | 1805-1880 | 1 | 30 |
| GSM1900 | 1850-1910 | 1930-1990 | 1 | 30 |
| WCDMA IMT | 1920-1980 | 2110-2170 | 3 | 24 |
| WCDMA PCS | 1850-1910 | 1930-1990 | 3 | 24 |
| WCDMA CELL | 824-849 | 869-894 | 3 | 24 |

| | | ANT_SEL0 | ANT_SEL1 | ANT_SEL2 | ANT_SEL3 |
|---|---|---|---|---|---|
| GCELL/EGSM_TX | GSM850/900 TX | 1 | 1 | 0 | 0 |
| DCS/PCS_TX | GSM1800/1900 TX | 1 | 0 | 0 | 0 |
| DCS_RX | GSM1800 RX | 0 | 0 | 1 | 0 |
| PCS_RX | GSM1900 RX | 0 | 0 | 0 | 0 |
| EGSM_RX | GSM900 RX | 0 | 1 | 0 | 0 |
| GCELL_RX/CUT | GSM850 RX | 0 | 1 | 1 | 0 |
| UMTS1(IMT) | | 1 | 0 | 1 | 0 |
| UMTS2(900) | | 1 | 0 | 1 | 1 |
| UMTS3(1900/AWS) | | 1 | 1 | 1 | 0 |

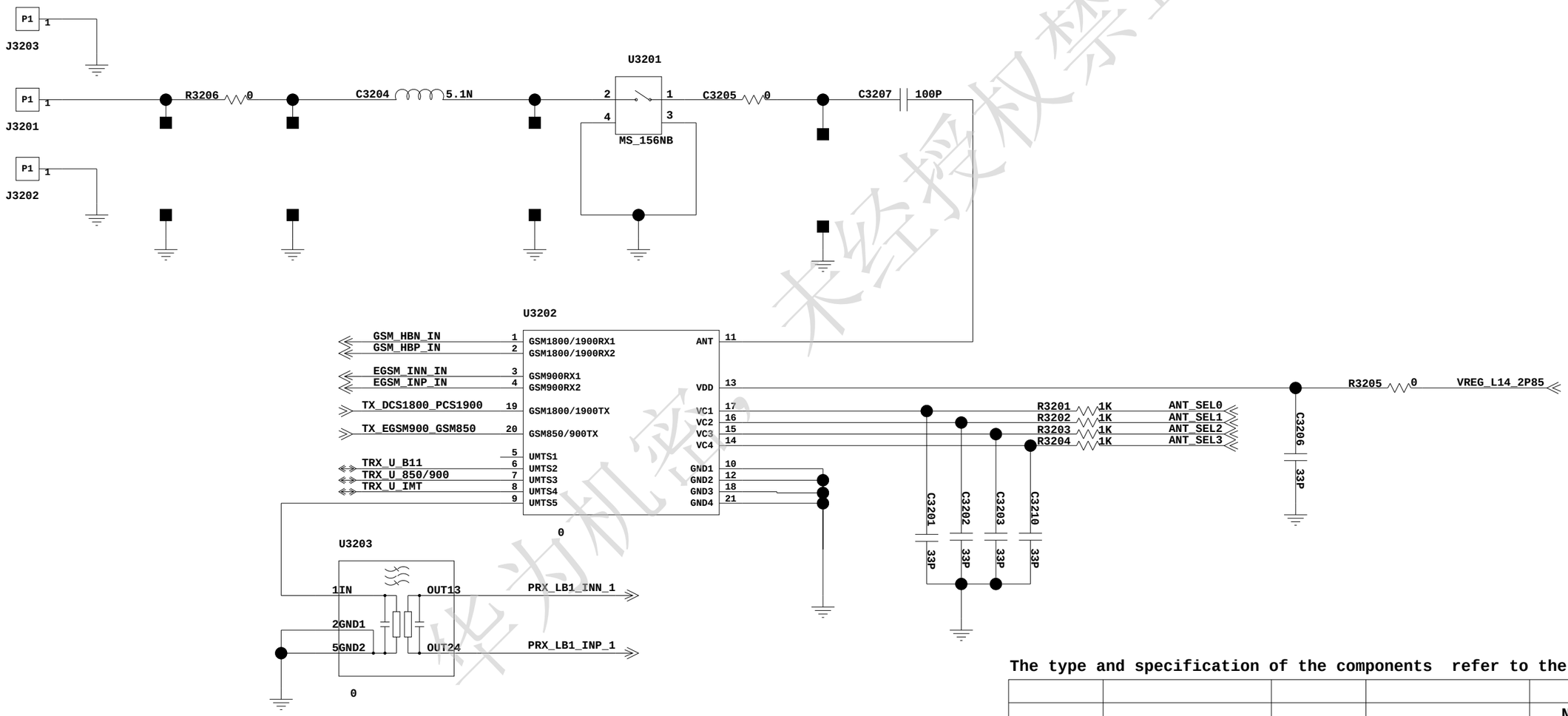


The type and specification of the components refer to the BOM

| | | | | | |
|---|---|---|---|---|---|
| | | | | NA | 2011-7-20 |
| | | | | ECA NO | DATE |
| DESIGNED | SONGGANG/64526 | HD2U886M | | 00704566 | |
| REVIEWED | SONGGANG/64526 | | | | |
| | | VER | PART_NUMBER | SHEET 24 OF 40 | |
| | | NA | 03021HES | HUAWEI TECH CO.,LTD. | |

华为机密 未经授权禁止扩散

# 25. WCDMA Band1 Power Amplifier

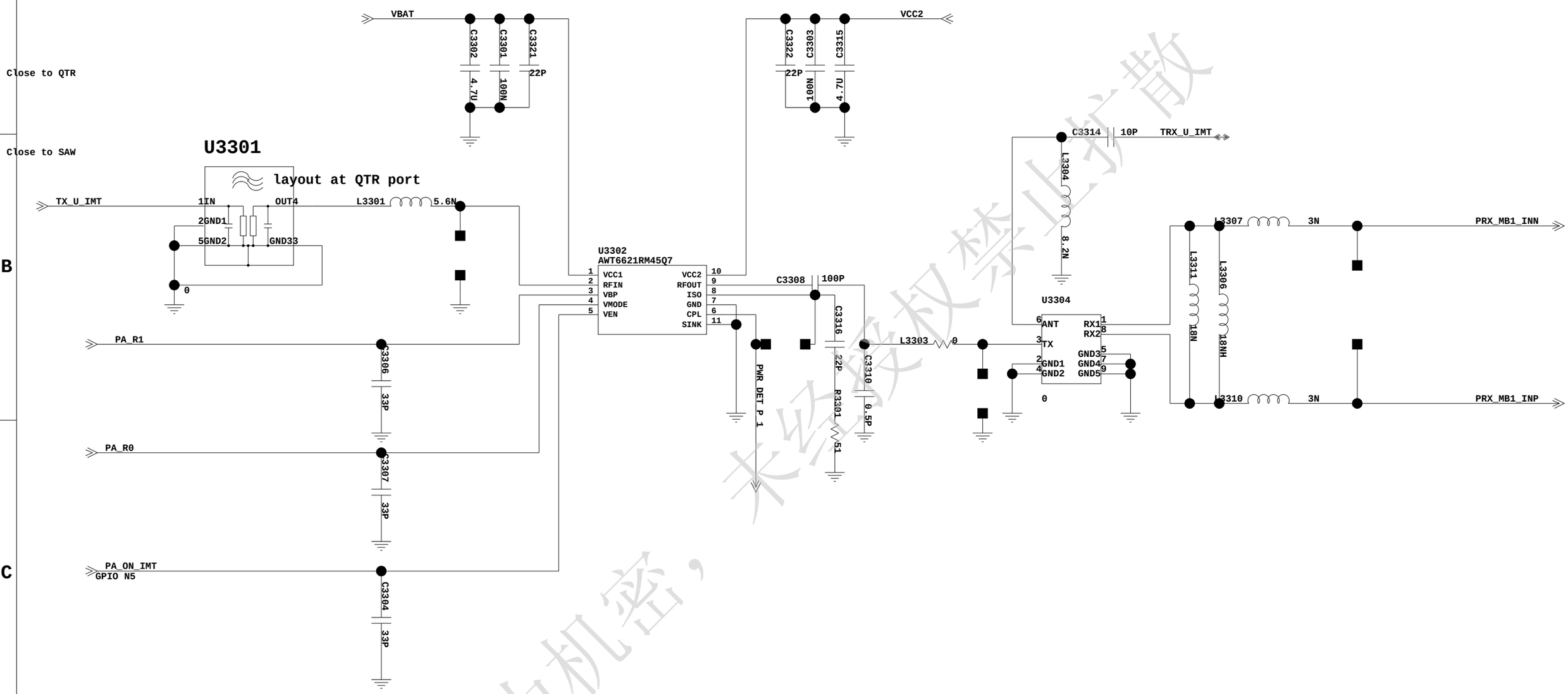


| WCDMA_PA_ON0/ON1 | PA STATE |
|---|---|
| H | ON |
| L | OFF |

| PA_VMODE0 | PA_VMODE1 | MODE |
|---|---|---|
| L | L | High Power |
| L | H | Middle Power |
| H | H | Low Power |

| | |
|---|---|
| WCDMA_PA_ON0 | W2100 |
| WCDMA_PA_ON1 | W1900 |
| WCDMA_PA_ON2 | W850/900 |

The type and specification of the components refer to the BOM

| | | | | | |
|---|---|---|---|---|---|
| | | | | NA | 2011-7-20 |
| | | | | ECA NO | DATE |
| DESIGNED | SONGGANG/64526 | HD2U886M | | 00704566 | |
| REVIEWED | SONGGANG/64526 | | | | |
| | | VER | PART_NUMBER | SHEET 25 OF 40 | |
| | | NA | 03021HES | HUAWEI TECH CO.,LTD. | |

华为机密，未经授权禁止扩散

# 26. WCDMA Band 5/8 Power Amplifier

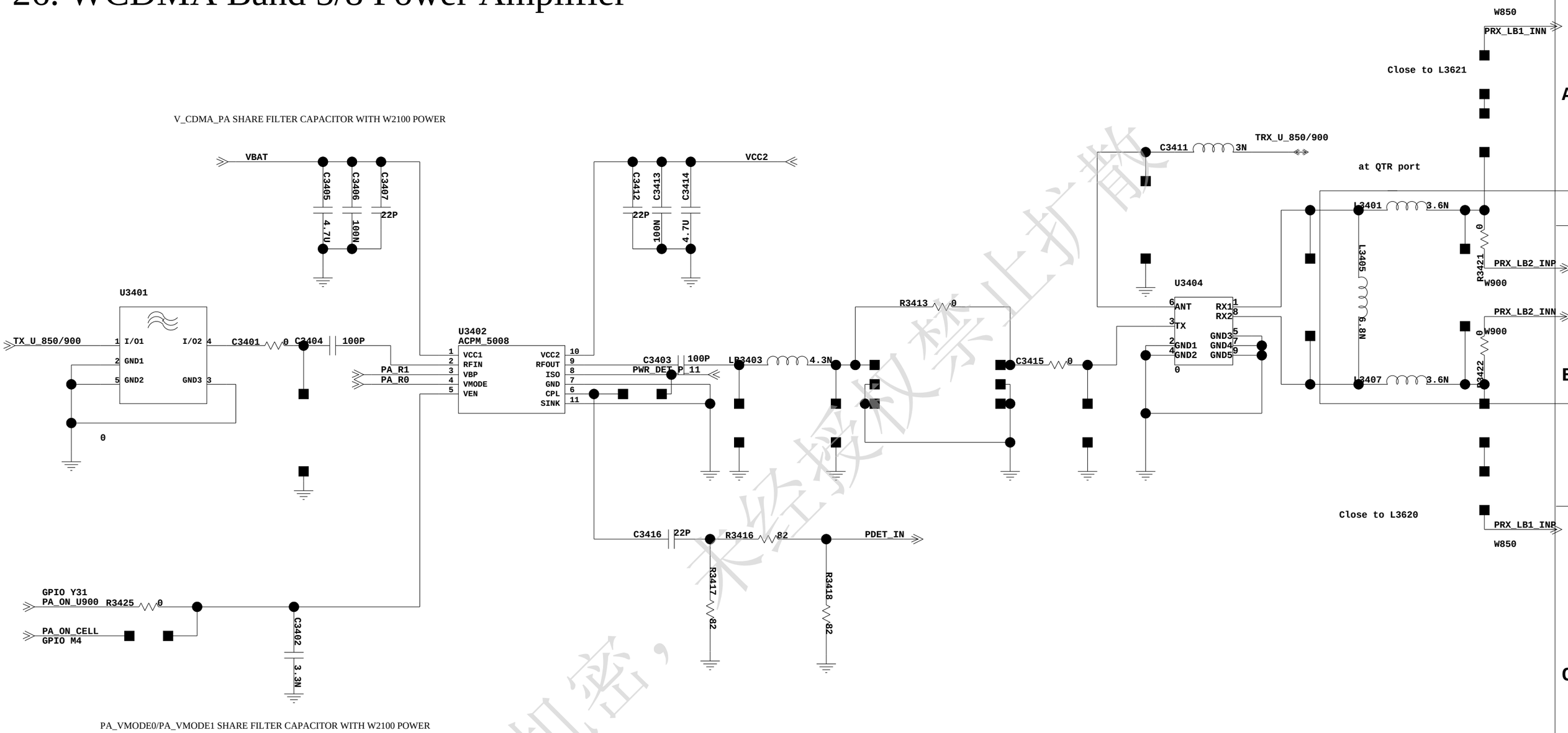


PA_VMODE0/PA_VMODE1 SHARE FILTER CAPACITOR WITH W2100 POWER

| PA_STATE | PA_ON1 |
|---|---|
| OFF | L |
| ON | H |

| POWER MODE | PA_VMODE1 | PA_VMODE0 |
|---|---|---|
| LOW POWER | L(>2.15V) | L(>2.15V) |
| MEDIUM POWER | L(>2.15V) | H(<0.5V) |
| HIGH POWER | H(<0.5V) | H(<0.5V) |

Note: L & H are FTM logical controls.

The type and specification of the components refer to the BOM

| | | | | | |
|---|---|---|---|---|---|
| | | | | NA | 2011-7-20 |
| | | | | ECA NO | DATE |
| DESIGNED | SONGGANG/64526 | HD2U886M | | 00704566 | |
| REVIEWED | SONGGANG/64526 | | | | |
| | | VER | PART_NUMBER | SHEET 26 OF 40 | |
| | | NA | 03021HES | HUAWEI TECH CO.,LTD. | |

华为机密，未经授权禁止扩散

# 27. WCDMA Band 4/2 Power Amplifier

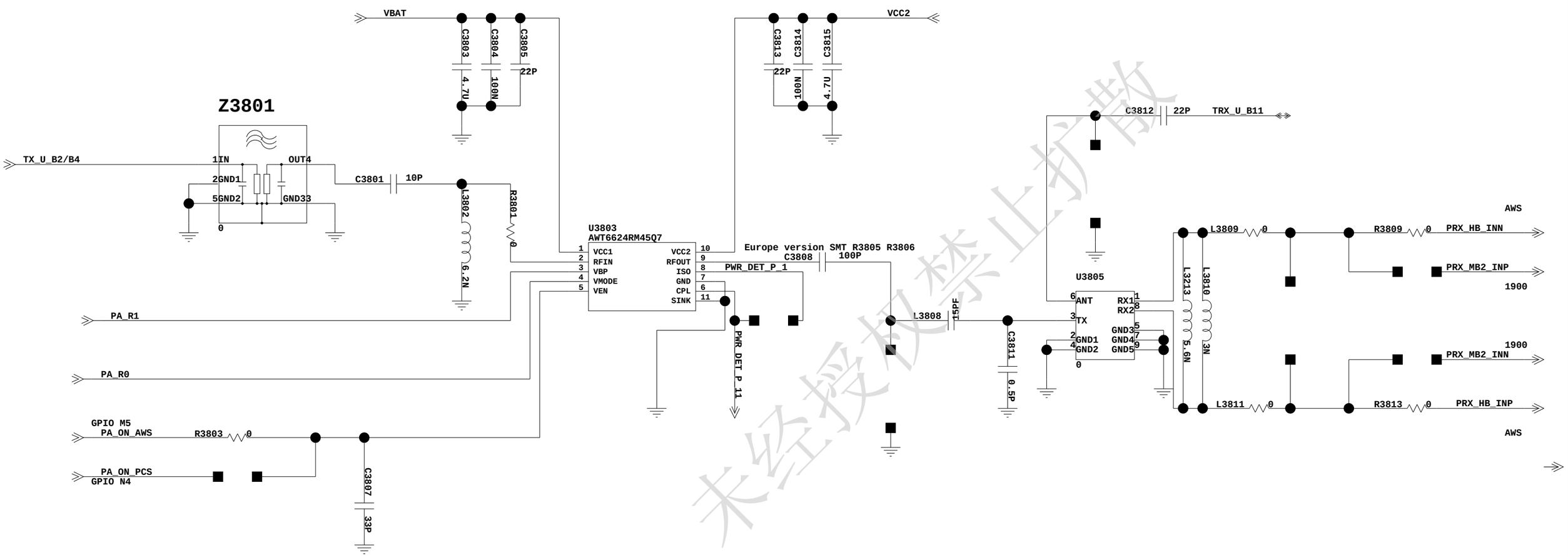


华为机密，未经授权禁止扩散

The type and specification of the components refer to the BOM

| | | | | | |
|---|---|---|---|---|---|
| | | | | NA | 2011-7-20 |
| | | | | ECA NO | DATE |
| DESIGNED | SONGGANG/64526 | HD2U886M | | 00704566 | |
| REVIEWED | SONGGANG/64526 | | | | |
| | | VER | PART_NUMBER | SHEET 27 OF 40 | |
| | | NA | 03021HES | HUAWEI TECH CO.,LTD. | |

# 28. GSM Linear_PA

| EDGE | GSM/GPRS |
|---|---|
| RF3161B | RF3196MS |
| 47100222 | 47100165 |

| GSM_PA_EN | PA |
|---|---|
| H | ON |
| L | OFF |

| GSM_PA_BAND | MODE |
|---|---|
| L | LOW BAND |
| H | HIGH BAND |

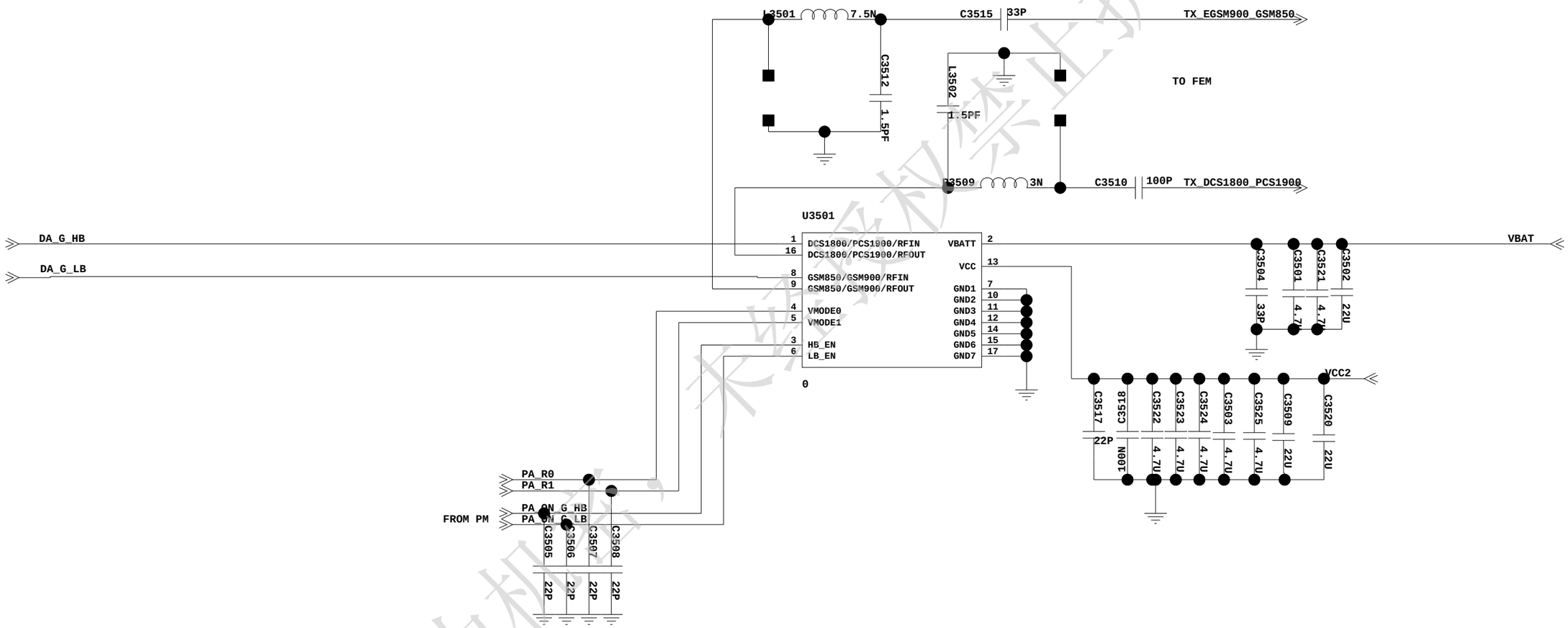


The type and specification of the components refer to the BOM

| | | | | | |
|---|---|---|---|---|---|
| | | | | NA | 2011-7-20 |
| | | | | ECA NO | DATE |
| DESIGNED | SONGGANG/64526 | HD2U886M | | 00704566 | |
| REVIEWED | SONGGANG/64526 | | | | |
| | | VER | PART_NUMBER | SHEET 28 OF 40 | |
| | | NA | 03021HES | HUAWEI TECH CO.,LTD. | |

华为机密，未经授权禁止扩散

# 29. RX MATCHING CIRCUIT

## GSM1800/1900 RX MATCHING

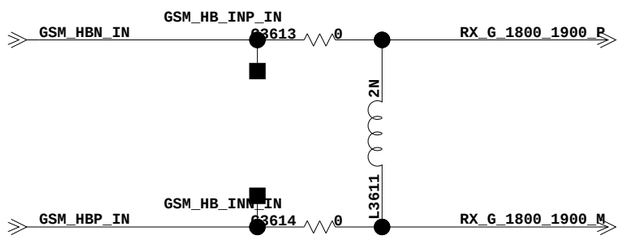


## GSM900 RX MATCHING

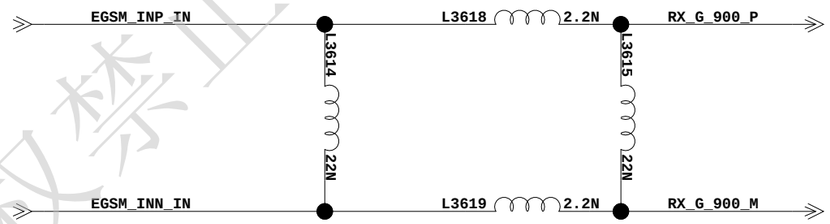


## GSM850 RX MATCHING

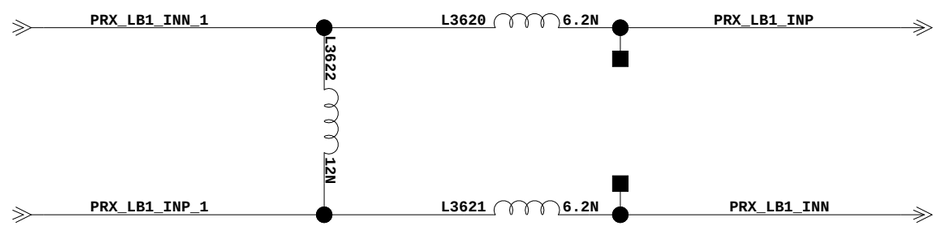


华为机密，未经授权禁止扩散

The type and specification of the components refer to the BOM

| | | | | | |
|---|---|---|---|---|---|
| | | | | NA | 2011-7-20 |
| | | | | ECA NO | DATE |
| DESIGNED | SONGGANG/64526 | HD2U886M | | 00704566 | |
| REVIEWED | SONGGANG/64526 | | | | |
| | | VER | PART_NUMBER | SHEET 29 OF 40 | |
| | | NA | 03021HES | HUAWEI TECH CO.,LTD. | |

# 30.QTR8615_CELL_SIGNALS 99050LEB

U4002 CODE:

| | Pin>9dBm | Pin<9dBm |
|---|---|---|
| CODE | 13030025 | 13010185 |
| SIZE | 2.5*2.0*1.3 | 1.4*1.1*0.4 |

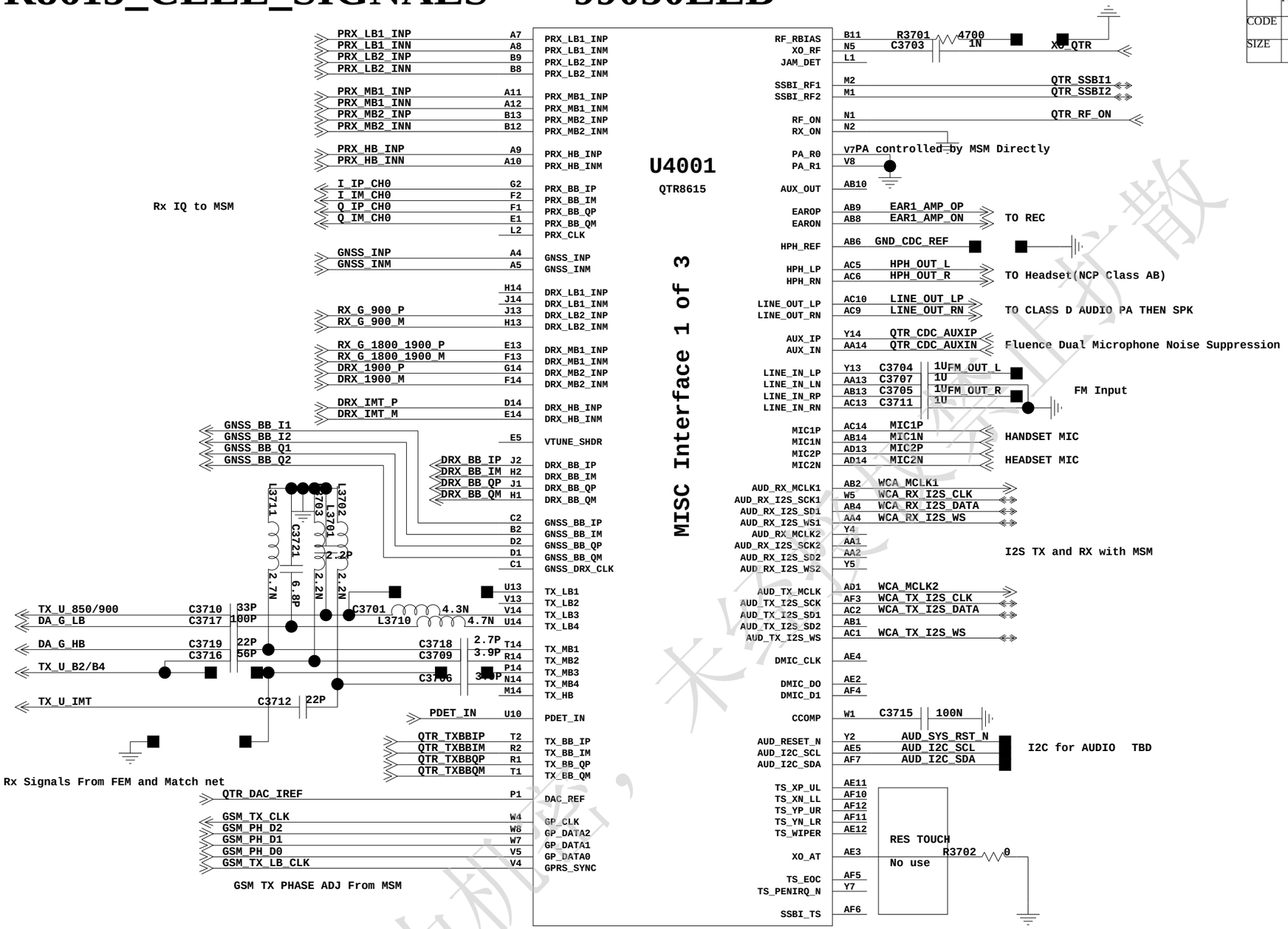


The type and specification of the components refer to the BOM

| | | | | | |
|---|---|---|---|---|---|
| | | | | NA | 2011-7-20 |
| | | | | ECA NO | DATE |
| DESIGNED | SONGGANG/64526 | HD2U886M | | 00704566 | |
| REVIEWED | SONGGANG/64526 | | | | |
| | | VER | PART_NUMBER | SHEET 30 OF 40 | |
| | | NA | 03021HES | HUAWEI TECH CO.,LTD. | |

华为机密，未经许可不扩散

# 31. QTR8615 POWER DISTRIBUTION

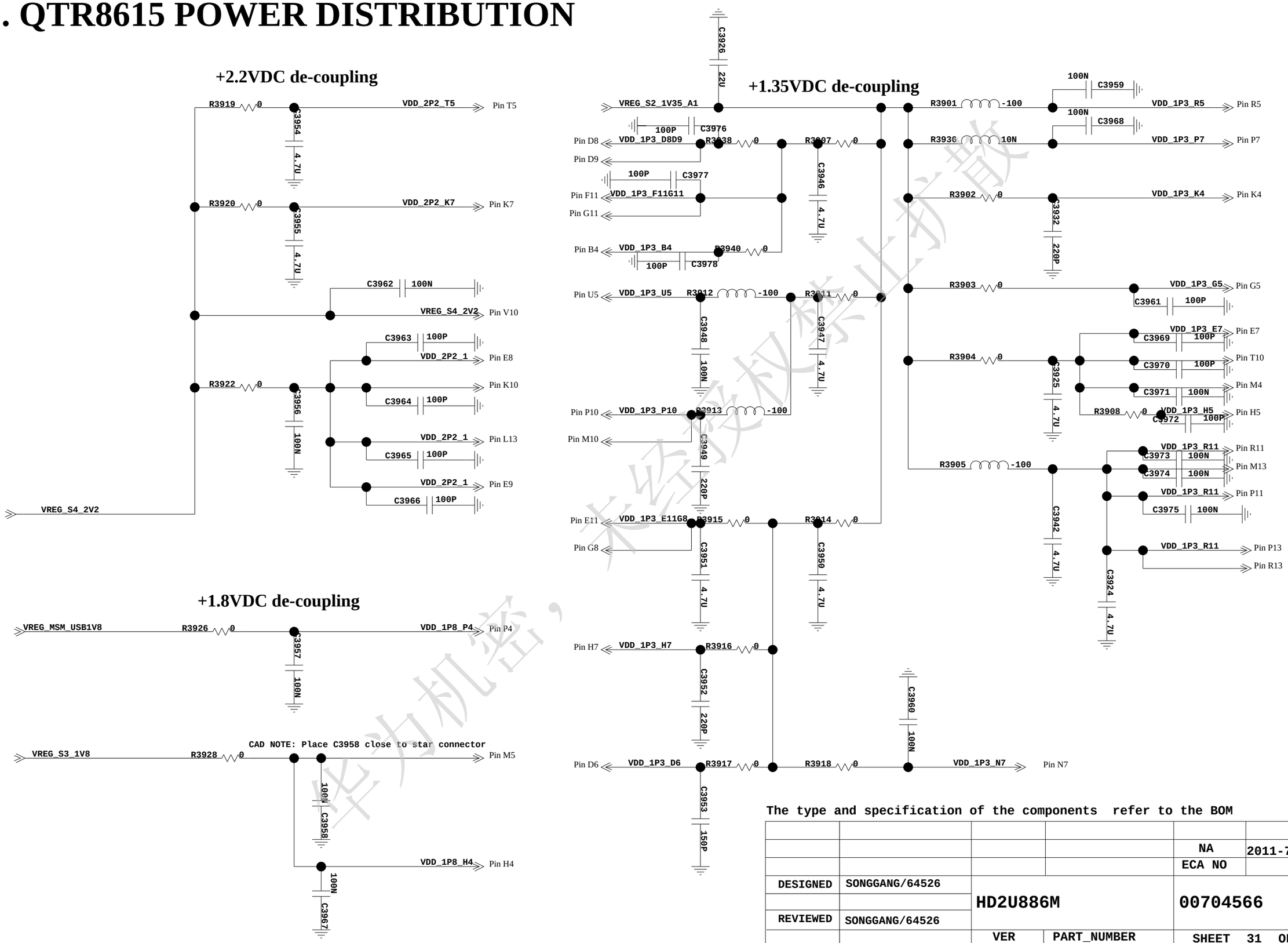


The type and specification of the components refer to the BOM

| | | | | | |
|---|---|---|---|---|---|
| | | | | NA | 2011-7-20 |
| | | | | ECA NO | DATE |
| DESIGNED | SONGGANG/64526 | HD2U886M | | 00704566 | |
| REVIEWED | SONGGANG/64526 | | | | |
| | | VER | PART_NUMBER | SHEET 31 OF 40 | |
| | | NA | 03021HES | HUAWEI TECH CO.,LTD. | |

华为机密，未经授权禁止扩散

# 32.QTR8615 PWR/GND DISTRIBUTION

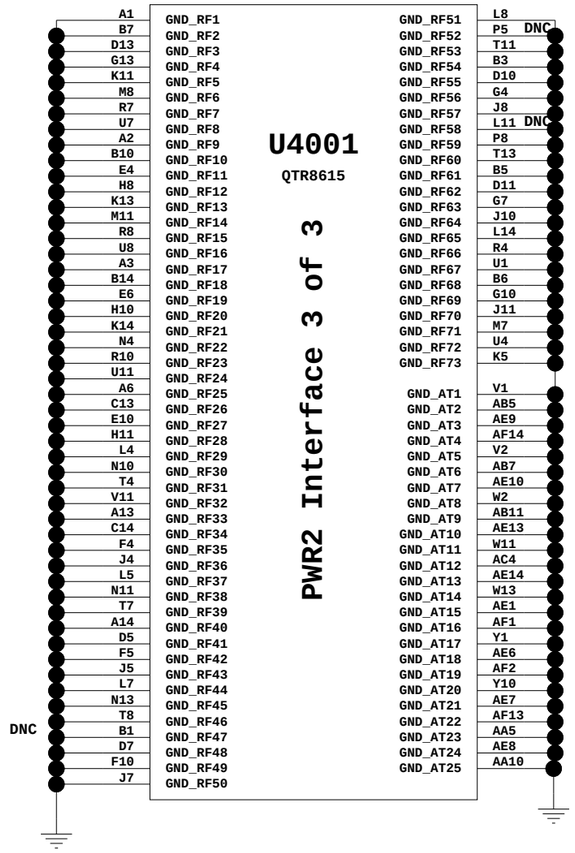


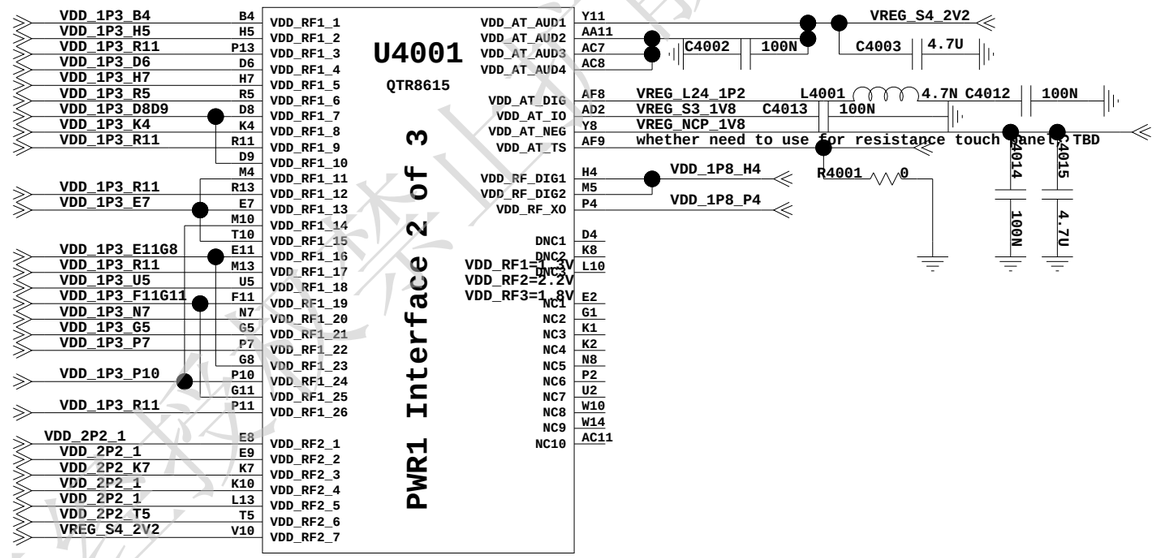


华为机密，未经授权禁止扩散

The type and specification of the components refer to the BOM

| | | | | | |
|---|---|---|---|---|---|
| | | | | NA | 2011-7-20 |
| | | | | ECA NO | DATE |
| DESIGNED | SONGGANG/64526 | HD2U886M | | 00704566 | |
| REVIEWED | SONGGANG/64526 | | | | |
| | | VER | PART_NUMBER | SHEET 32 OF 40 | |
| | | NA | 03021HES | HUAWEI TECH CO.,LTD. | |

# 33.GPS

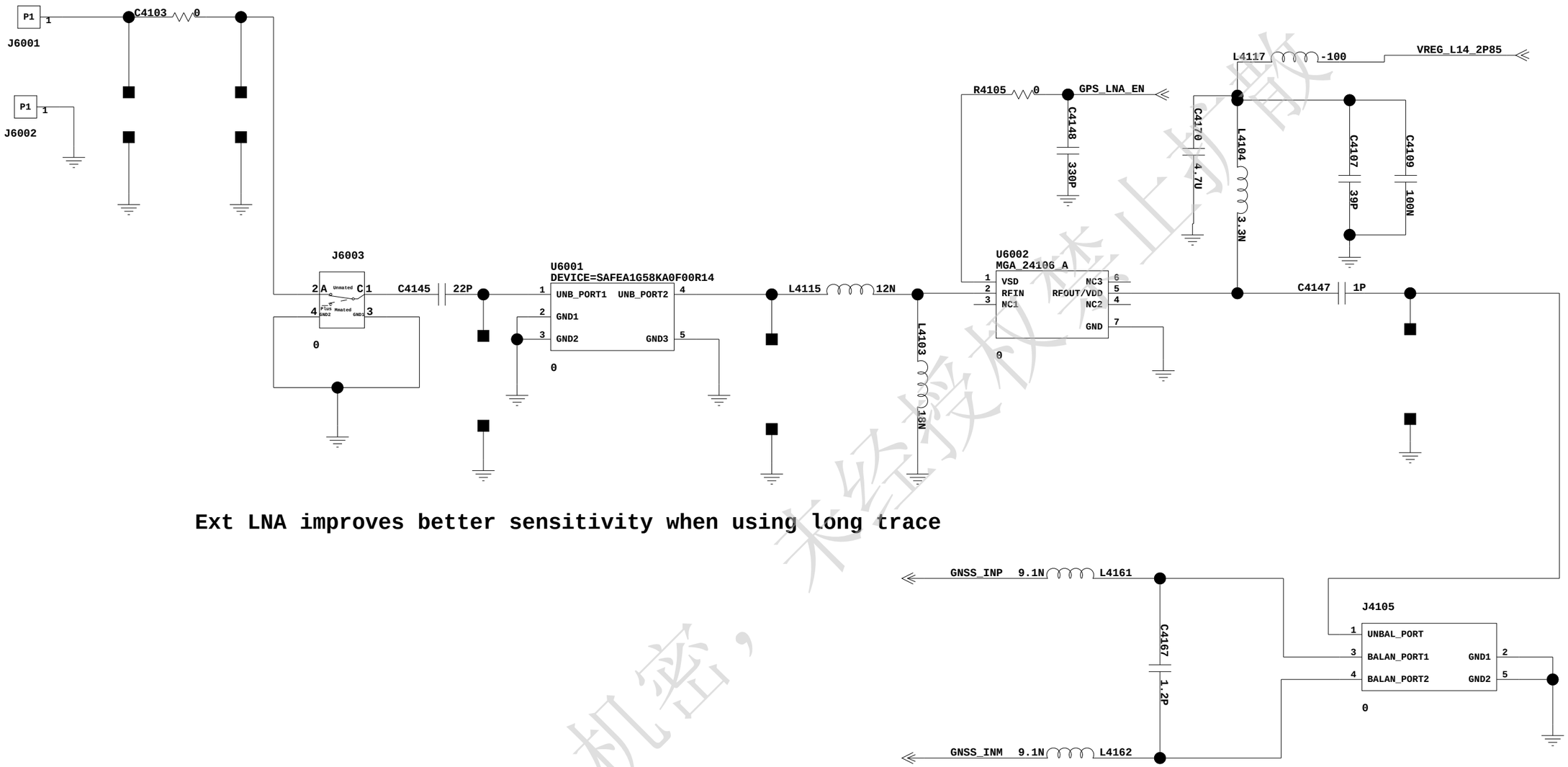


Ext LNA improves better sensitivity when using long trace

The type and specification of the components refer to the BOM

| | | | | | |
|---|---|---|---|---|---|
| | | | | NA | 2011-7-20 |
| | | | | ECA NO | DATE |
| DESIGNED | SONGGANG/64526 | HD2U886M | | 00704566 | |
| REVIEWED | SONGGANG/64526 | | | | |
| | | VER | PART_NUMBER | SHEET 33 OF 40 | |
| | | NA | 03021HES | HUAWEI TECH CO.,LTD. | |

华为机密，未经授权禁止扩散

# 34.WLAN & BT & FM interface

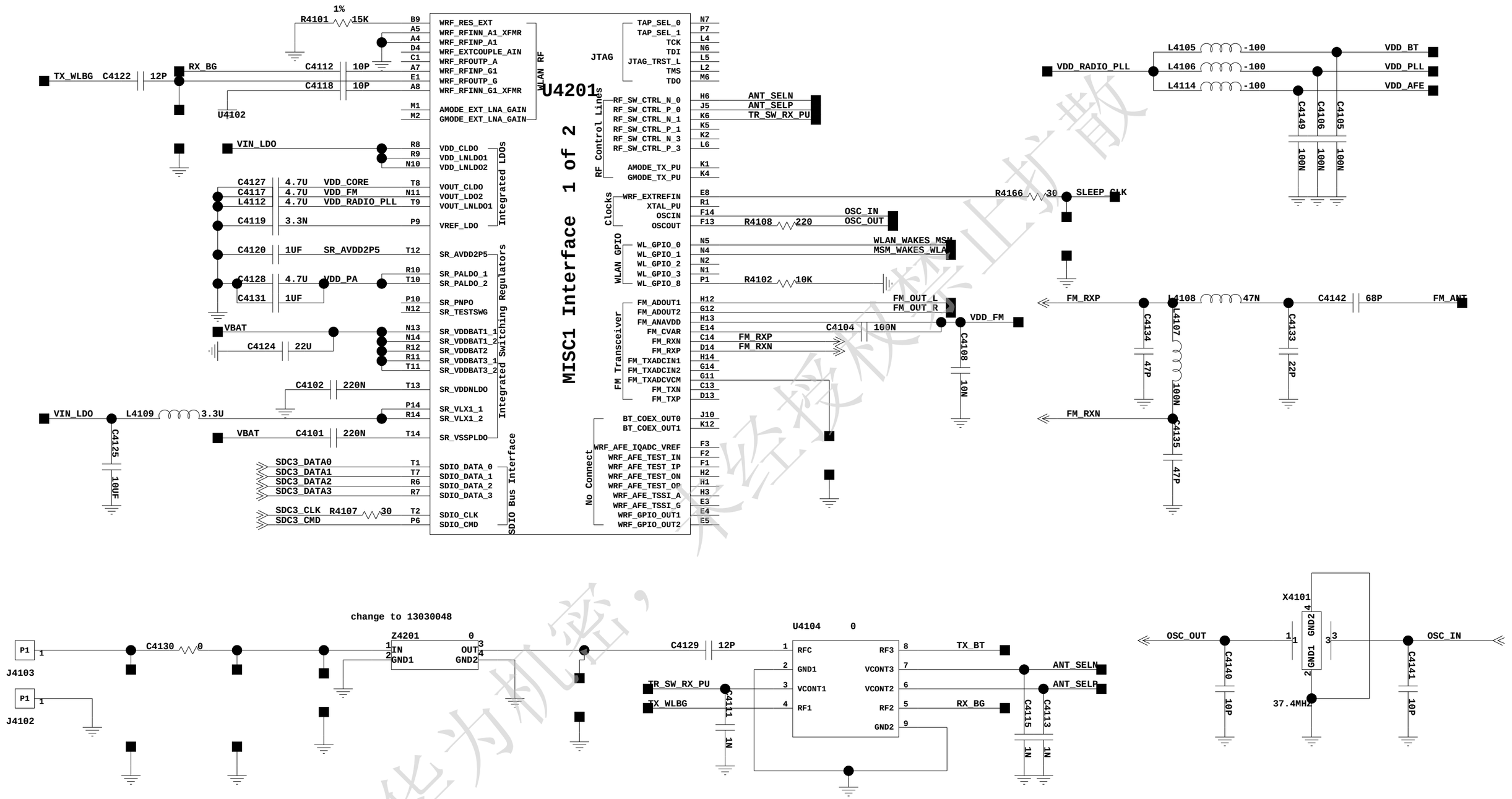


The type and specification of the components refer to the BOM

| | | | | | |
|---|---|---|---|---|---|
| | | | | NA | 2011-7-20 |
| | | | | ECA NO | DATE |
| DESIGNED | SONGGANG/64526 | HD2U886M | | 00704566 | |
| REVIEWED | SONGGANG/64526 | | | | |
| | | VER | PART_NUMBER | SHEET 34 OF 40 | |
| | | NA | 03021HES | HUAWEI TECH CO.,LTD. | |

华为机密，未经授权禁止扩散

# 35.WLAN & BT & FM POWER and GND

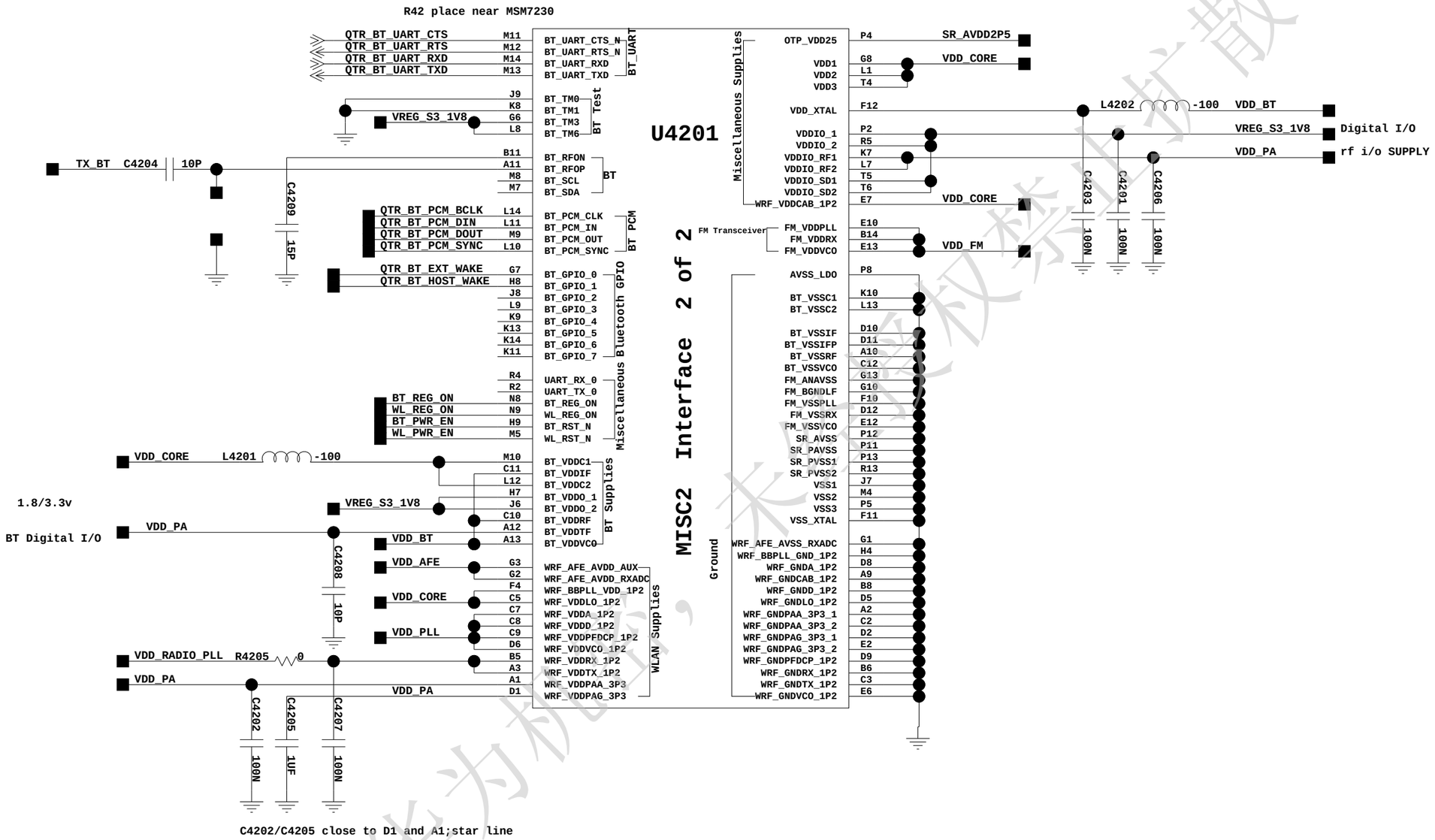


The type and specification of the components refer to the BOM

| | | | | | |
|---|---|---|---|---|---|
| | | | | NA | 2011-7-20 |
| | | | | ECA NO | DATE |
| DESIGNED | SONGGANG/64526 | HD2U886M | | 00704566 | |
| REVIEWED | SONGGANG/64526 | | | | |
| | | VER | PART_NUMBER | SHEET 35 OF 40 | |
| | | NA | 03021HES | HUAWEI TECH CO.,LTD. | |

华为机密，未经授权禁止扩散

# 36.DIVERSITY PATH FRONT END

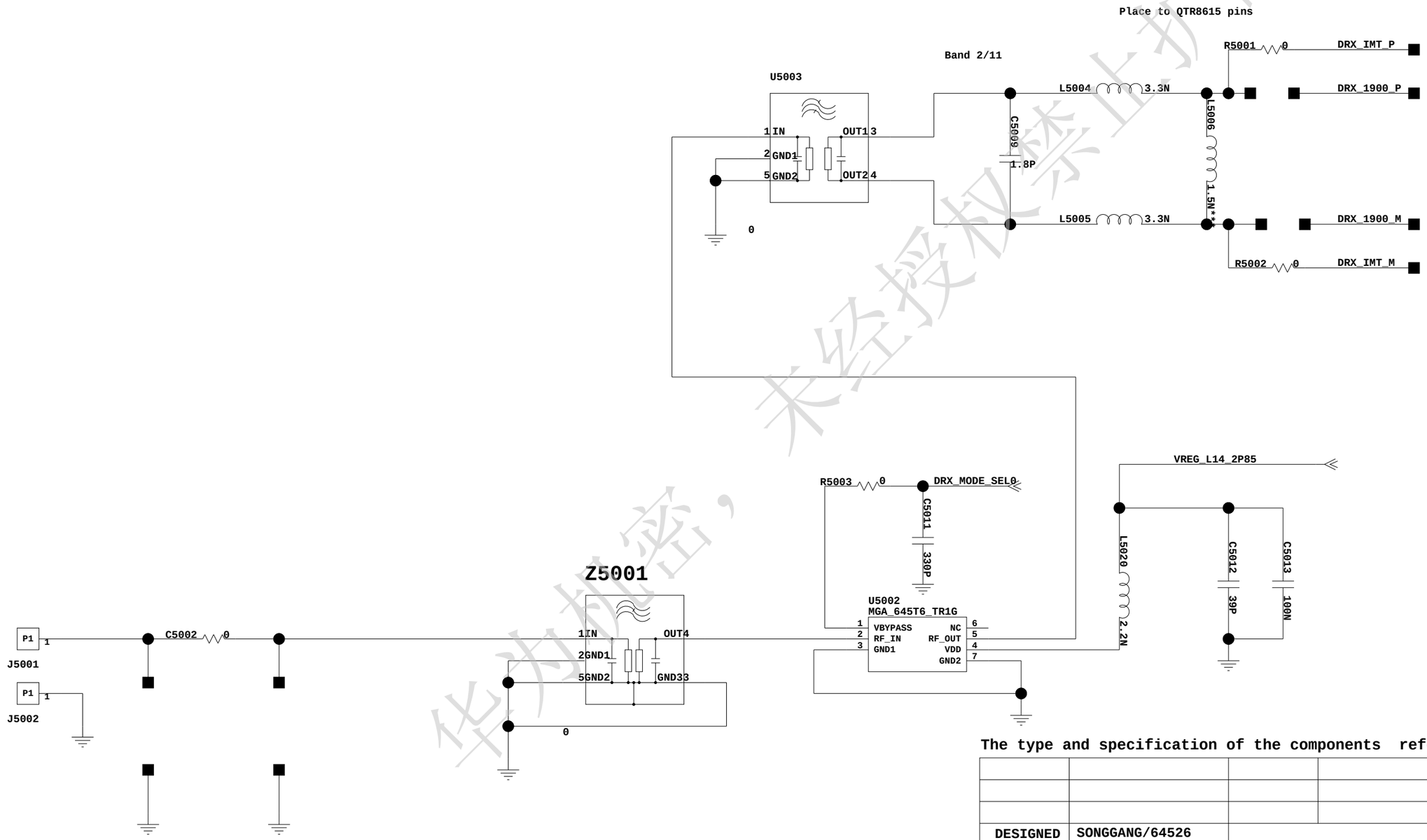


华为机密，未经授权禁止扩散

The type and specification of the components refer to the BOM

| | | | | | |
|---|---|---|---|---|---|
| | | | | NA | 2011-7-20 |
| | | | | ECA NO | DATE |
| DESIGNED | SONGGANG/64526 | HD2U886M | | 00704566 | |
| REVIEWED | SONGGANG/64526 | | | | |
| | | VER | PART_NUMBER | SHEET 36 OF 40 | |
| | | NA | 03021HES | HUAWEI TECH CO.,LTD. | |

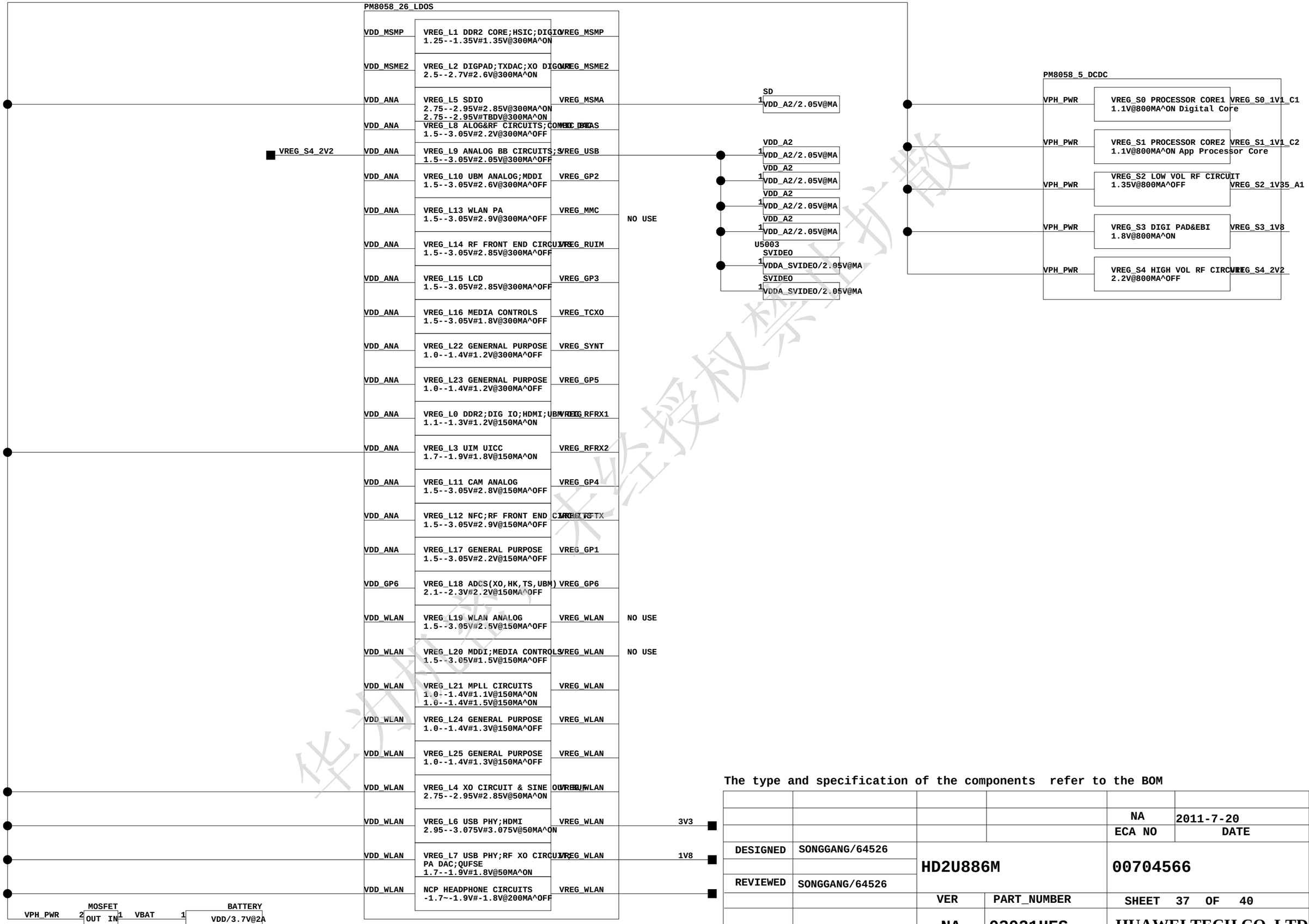


华为机密，未经授权禁止扩散

The type and specification of the components refer to the BOM

| | | | | | |
|---|---|---|---|---|---|
| | | | | NA | 2011-7-20 |
| | | | | ECA NO | DATE |
| DESIGNED | SONGGANG/64526 | HD2U886M | | 00704566 | |
| REVIEWED | SONGGANG/64526 | | | | |
| | | VER | PART_NUMBER | SHEET 37 OF 40 | |
| | | NA | 03021HES | HUAWEI TECH CO.,LTD. | |

# 38.PA DCDC

Ven_H>1.2V

Vcon:MAX 1.5V

SYNC if high:Can not run in PFM

BPEN low:auto-bypass mode

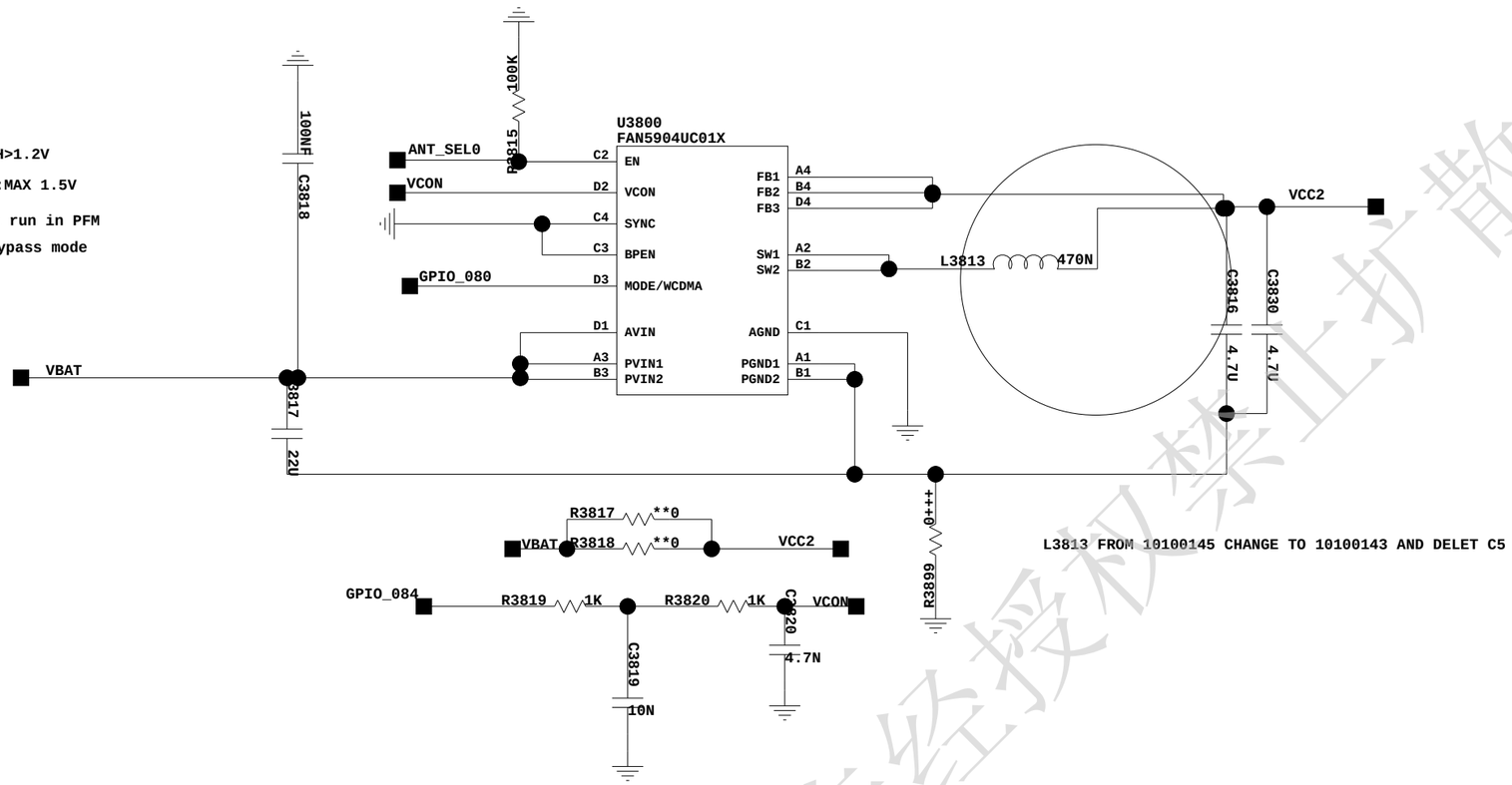


L3813 FROM 10100145 CHANGE TO 10100143 AND DELET C5

华为机密，未经授权禁止扩散

The type and specification of the components refer to the BOM

| | | | | | |
|---|---|---|---|---|---|
| | | | | NA | 2011-7-20 |
| | | | | ECA NO | DATE |
| DESIGNED | SONGGANG/64526 | HD2U886M | | 00704566 | |
| REVIEWED | SONGGANG/64526 | | | | |
| | | VER | PART_NUMBER | SHEET 38 OF 40 | |
| | | NA | 03021HES | HUAWEI TECH CO.,LTD. | |

# 39.2.85 DCDC

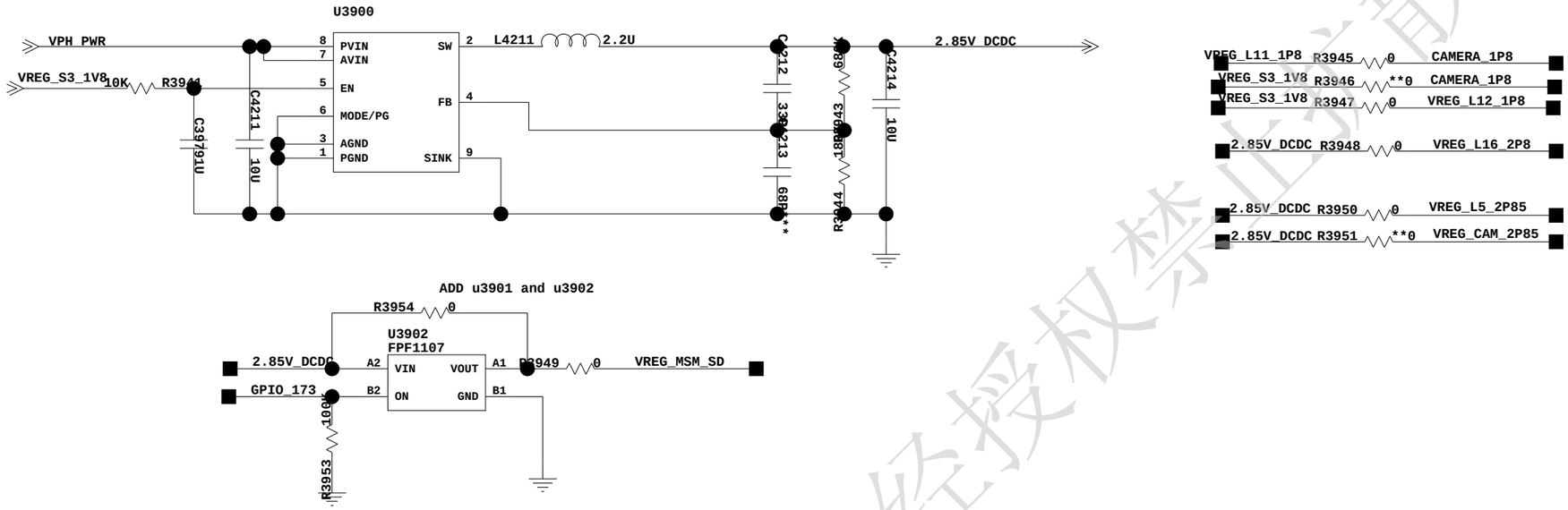





华为机密，未经授权禁止扩散

The type and specification of the components refer to the BOM

| | | | | | |
|---|---|---|---|---|---|
| | | | | NA | 2011-7-20 |
| | | | | ECA NO | DATE |
| DESIGNED | SONGGANG/64526 | HD2U886M | | 00704566 | |
| REVIEWED | SONGGANG/64526 | | | | |
| | | VER | PART_NUMBER | SHEET 39 OF 40 | |
| | | NA | 03021HES | HUAWEI TECH CO.,LTD. | |

# 40.LCD Backlight driver

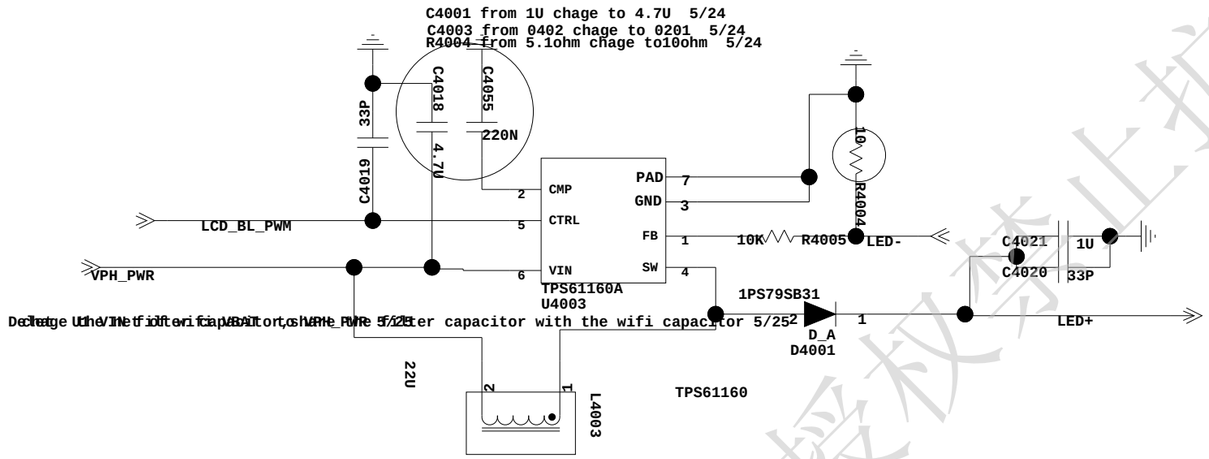


The type and specification of the components refer to the BOM

| | | | | | |
|---|---|---|---|---|---|
| | | | | NA | 2011-7-20 |
| | | | | ECA NO | DATE |
| DESIGNED | SONGGANG/64526 | HD2U886M | | 00704566 | |
| REVIEWED | SONGGANG/64526 | | | | |
| | | VER | PART_NUMBER | SHEET 40 OF 40 | |
| | | NA | 03021HES | HUAWEI TECH CO.,LTD. | |

华为机密，未经授权禁止扩散